IDS STANDARD MECHANICAL DETAILS

FIRE PROTECTION

FP00	TYPICAL HYDRANT SETTING
FP01	FREE STANDING FIRE DEPARTMENT CONNECTION SETTING DETAIL
FP02	TYPICAL SPRINKLER PIPING DIAGRAM
FP03	AUTOMATIC SPRINKLER RISER PIPING DIAGRAM
FP04	COMBINATION SPRINKLER/ STANDPIPE RISER DETAIL

GENERAL PIPING

GP00	PIPE PENETRATIONS
GP01	PIPE PENETRATION DETAIL THRU EXISTING FLOOR
GP02	PIPE PENETRATION DETAIL THRU NEW FLOOR
GP03	PIPE PENETRATION THRU EXISTING EXTERIOR WALL BELOW GRADE
GP04	PIPE PENETRATION THRU NEW EXTERIOR WALL BELOW GRADE
GP05	PIPE SUPPORT DETAIL (4 INCH AND LARGER)
GP06	SINGLE PIPE SUPPORT (LESS THAN 4 INCH)
GP07	INLINE CIRCULATING PUMP DETAIL

HYDRONIC PIPING

HP00	HYDRONIC WATER COIL WITH 2-WAY CONTROL VALVE PIPING DIAGRAM
HP01	HOT WATER HEATING COIL WITH 3-WAY CONTROL VALVE PIPING DIAGRAM
HP02	CHILLED WATER COOLING COIL WITH 3-WAY CONTROL VALVE PIPING DIAGRAM
HP03	HYDRONIC COIL WITH CIRCULATING PUMP AND 2-WAY CONTROL VALVE PIPING DIAGRAM
HP04	TERMINAL HOT WATER HEATING COIL WITH 2-WAY CONTROL VALVE
HP05	TERMINAL HOT WATER HEATING COIL WITH 3-WAY CONTROL VALVE
HP06	HOT WATER CONVECTOR OR CABINET UNIT HEATER PIPING DIAGRAM
HP07	HOT WATER UNIT HEATER PIPING DIAGRAM
HP08	LINEAR RADIANT CEILING PANEL PIPING DIAGRAM
HP09	HOT WATER HEATING FINNED TUBE RADIATION PIPING DIAGRAM
HP10	SHELL & TUBE HEAT EXCHANGER PIPING DIAGRAM
HP11	PLATE & FRAME HEAT EXCHANGER PIPING DIAGRAM
HP12	GAS FIRED MODULAR HOT WATER HEATING BOILER PIPING DIAGRAM
HP13	CONDENSING BOILER PIPING DIAGRAM
HP14	BASE MOUNTED END SUCTION PUMP PIPING DIAGRAM
HP15	BASE MOUNTED END SUCTION PUMP (ISOLATED) PIPING DIAGRAM
HP16	DOUBLE SUCTION PUMP PIPING DIAGRAM
HP17	HORIZONTAL SPLIT-CASE PUMP (ISOLATED) PIPING DIAGRAM
HP18	VERTICAL DOUBLE SUCTION PUMP PIPING DIAGRAM
HP19	CONDENSER WATER PUMP PIPING DIAGRAM
HP20	COIL DRAIN PAN PIPING DETAIL
HP21	GLYCOL FEED UNIT PIPING DIAGRAM
HP22	SHOT TYPE CHEMICAL FEEDER PIPING DIAGRAM
HP23	AIR/ DIRT SEPARATOR AND FLOOR MOUNTED EXPANSION TANK
HP24	HORIZONTAL WATER SOURCE HEAT PUMP PIPING DIAGRAM

CLICK IDS LOGO TO RETURN TO INDEX

IDS STANDARD MECHANICAL DETAILS

PLUMBING PIPING

PL00 WATER METER DETAIL
PL01 WATER SERVICE ENTRANCE DETAIL
PL02 ISLAND SINK WASTE & VENT DETAIL
PL03 LABORATORY AIR COMPRESSOR PIPING DETAIL
PL04 GAS FIRED WATER HEATER PIPING DIAGRAM
PL05 SIMPLEX SUBMERSIBLE SUMP PUMP DETAIL
PL06 DUPLEX SUBMERSIBLE SUMP PUMP DETAIL
PL07 DUPLEX SUMP PUMP DETAIL
PL08 DUPLEX WATER SOFTENER PIPING DIAGRAM
PL09 SHELF MOUNTED ELECTRIC WATER HEATER DIAGRAM
PL10 THREE COMPARTMENT SINK WITH GREASE INTERCEPTOR
PL11 TYPICAL FAUCET VALVING INSTALLATION DIAGRAM
PL12 COMPRESSED AIR FILTER/ LUBRICATOR DETAIL
PL13 ROOF MOUNTED GAS PIPE SUPPORT DETAIL

SHEET METAL

SM00 SQUARE & RECT ELBOWS - LOW VELOCITY
SM01 DUCT SEAL AT NON-RATED WALL
SM02 TYPICAL AIR TERMINAL DEVICE DETAIL
SM03 TYPICAL DUCT TRANSITION
SM04 SHEET METAL FORMED INLET DETAIL
SM05 TYPICAL CEILING RETURN AIR GRILLE SOUND TRAP
SM06 TYPICAL FIRE DAMPER CURTAIN TYPE
SM07 TYPICAL FAN POWERED BOX DETAIL
SM08 RETURN & EXHAUST AIR GRILLE BRANCH CONNECTION DETAIL
SM09 LAB SUPPLY AIR VALVE INSTALLATION DETAIL
SM10 ROOF MOUNTED DUCT INSULATION DETAIL
SM11 ROOF MOUNTED DUCT SUPPORT DETAIL
SM12 Z-DUCT TRANSFER DUCT DETAIL
SM13 EXHAUST STACK DETAIL

REFRIGERATION

REF00 ELECTRIC DRIVE WATER COOLED WATER CHILLER PIPING DIAGRAM
REF01 EVAPORATIVE FLUID COOLER WITH SPRAY WATER TREATMENT PIPING DIAGRAM
REF02 EVAPORATIVE CONDENSER WITH SPRAY WATER TREATMENT PIPING DIAGRAM WITH REFRIGERANT RECEIV
REF03 CONDUCTIVITY CONTROLLED CONDENSER WATER TREATMENT DIAGRAM
REF04 CONDUCTIVITY / FLOW PROPORTIONAL CONTROLLED CONDENSER WATER TREATMENT DIAGRAM
REF05 RECIPROCATING AIR COOLED CHILLER PIPING DIAGRAM
REF06 STEAM ABSORPTION MACHINE CONDENSER WATER SCHEMATIC PIPING DIAGRAM
REF07 STEAM ABSORPTION MACHINE CHILLED WATER SCHEMATIC PIPING DIAGRAM
REF08 STEAM ABSORPTION MACHINE STEAM & CONDENSATE SCHEMATIC PIPING DIAGRAM
REF09 STEAM ABSORPTION CHILLER PIPING DIAGRAM
REF10 CONDENSING UNIT PIPING DIAGRAM
REF11 COOLING TOWER PIPING DETAIL
REF12 CERAMIC COOLING TOWER PIPING DIAGRAM
REF13 AIR COOLED CONDENSING UNIT STRAP DIAGRAM

iDS CLICK IDS LOGO TO RETURN TO INDEX

IDS STANDARD MECHANICAL DETAILS

STEAM

STM00 STEAM HEATING COIL PIPING DIAGRAM
STM01 STEAM HEATING COIL BANK PIPING DIAGRAM
STM02 STEAM CONVECTOR OR CABINET UNIT HEATER DIAGRAM
STM03 STEAM FINNED TUBE RADIATION PIPING DIAGRAM
STM04 STEAM UNIT HEATER PIPING DIAGRAM
STM05 STEAM HUMIDIFIER
STM06 STEAM TO HOT WATER HEATING EXCHANGER PIPING DIAGRAM
STM07 STEAM DRIP & TRAP DETAIL
STM08 CONDENSATE COOLER PIPING DIAGRAM
STM09 DUPLEX CONDENSATE RETURN UNIT PIPING DIAGRAM
STM10 FLASH TANK DETAIL
STM11 RELIEF VENT DETAIL

VRF

VRF00 VRF DUCTED EVAPORATOR DETAIL
VRF01 REFRIGERATION MODE SELECTOR BOX DETAIL
VRF02 VFC CEILING CASSETTE INDOOR UNIT DETAIL
VRF03 ROOF MOUNTED REFRIGERANT PIPE SUPPORT DETAIL
VRF04 REFRIGERANT PIPE HANGER DETAIL

iDS CLICK IDS LOGO TO RETURN TO INDEX

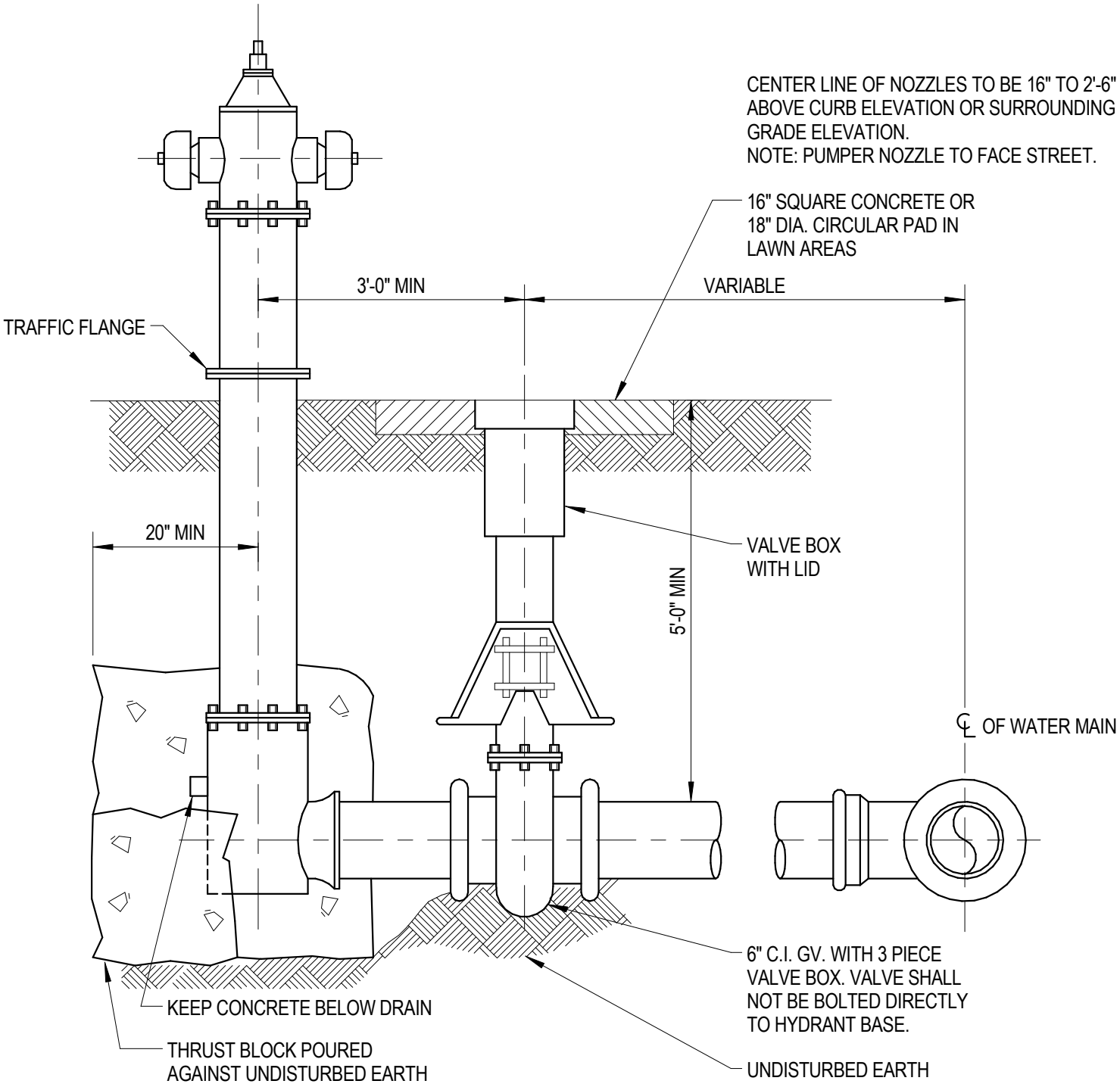

TYPICAL HYDRANT SETTING

NO SCALE

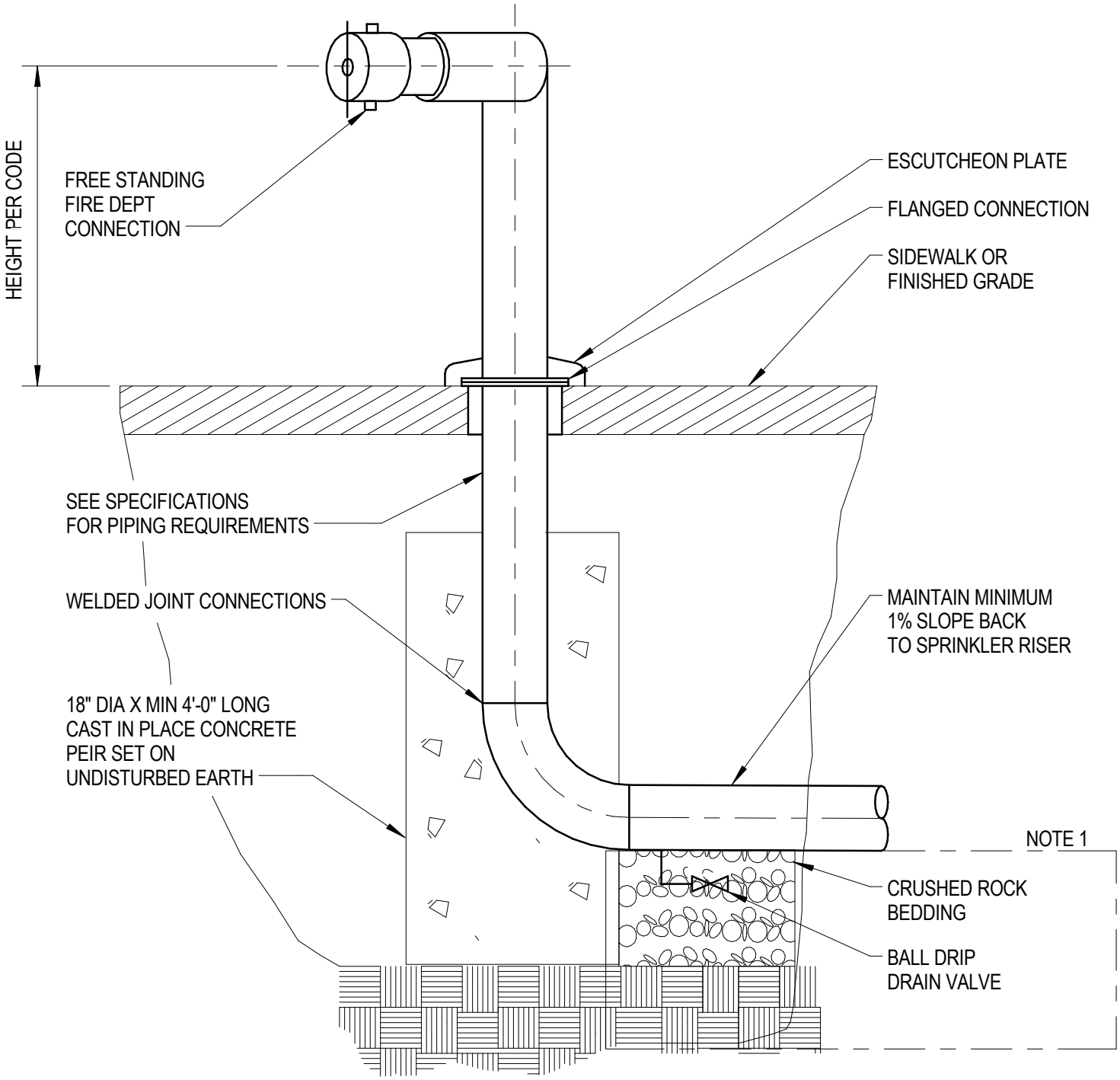

NOTE:

1. PROVIDE DRAIN AND ASSOCIATED ROCK BEDDING ONLY IF UNABLE TO SLOPE AND DRAIN PIPING BACK TO AUTOMATIC REGISTER

FREE STANDING FIRE DEPARTMENT CONNECTION SETTING DETAIL

NO SCALE

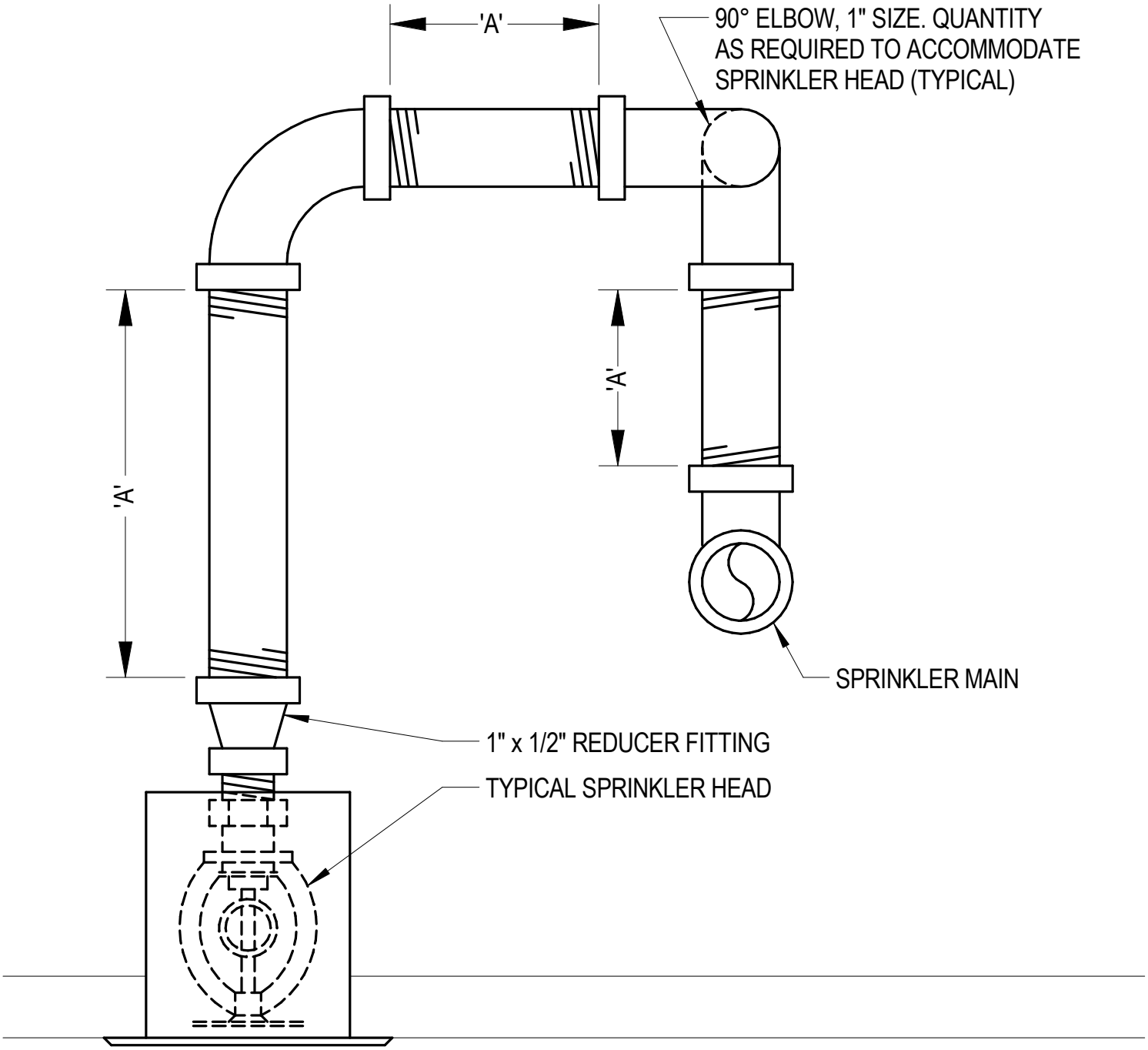

TYPICAL SPRINKLER PIPING DETAIL

NO SCALE

'A' = FIELD VERIFY EXACT LENGTH AS REQUIRED FOR EACH SPRINKLER HEAD INSTALLATION.

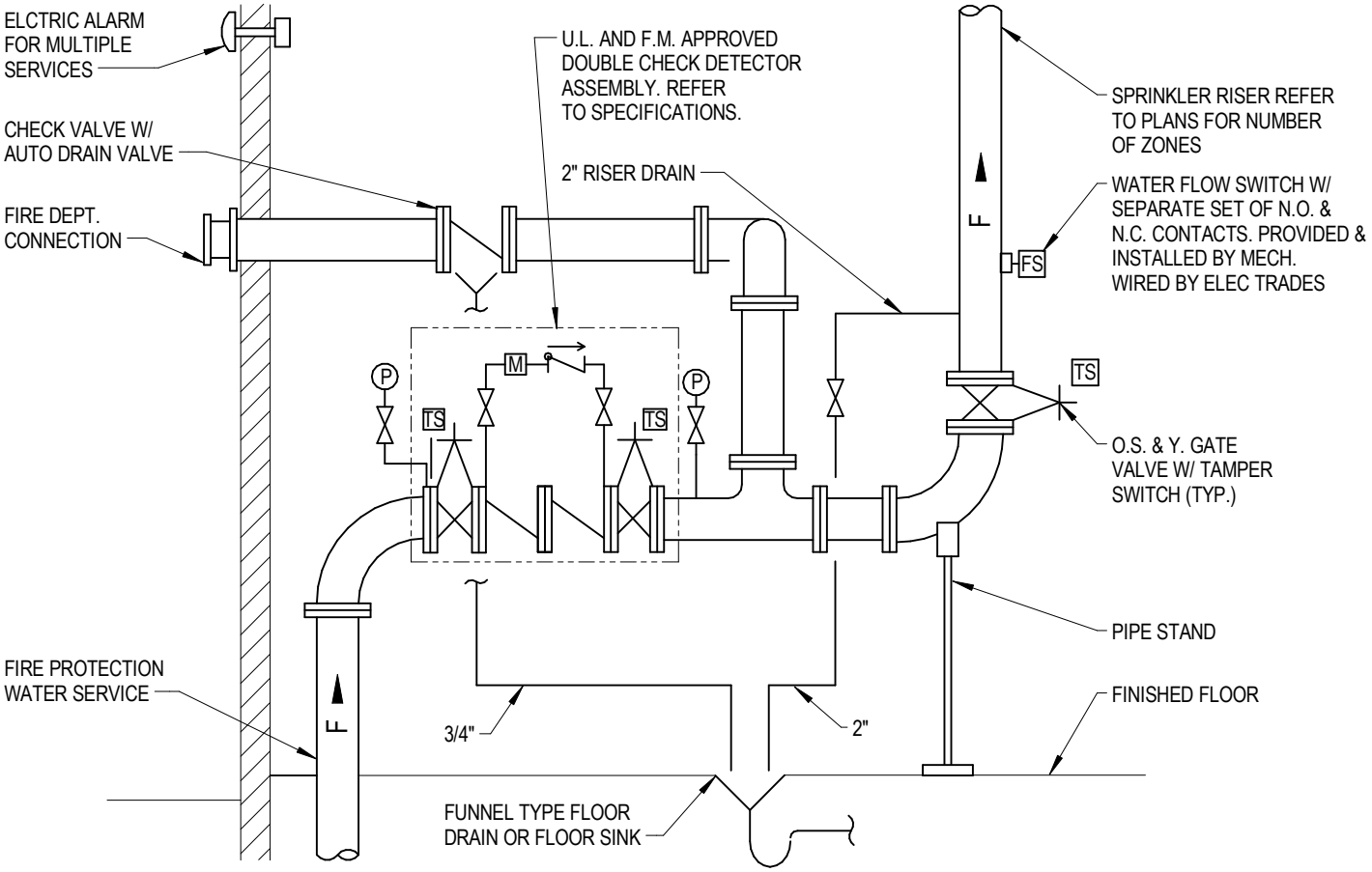

AUTOMATIC SPRINKLER RISER PIPING DIAGRAM

NO SCALE

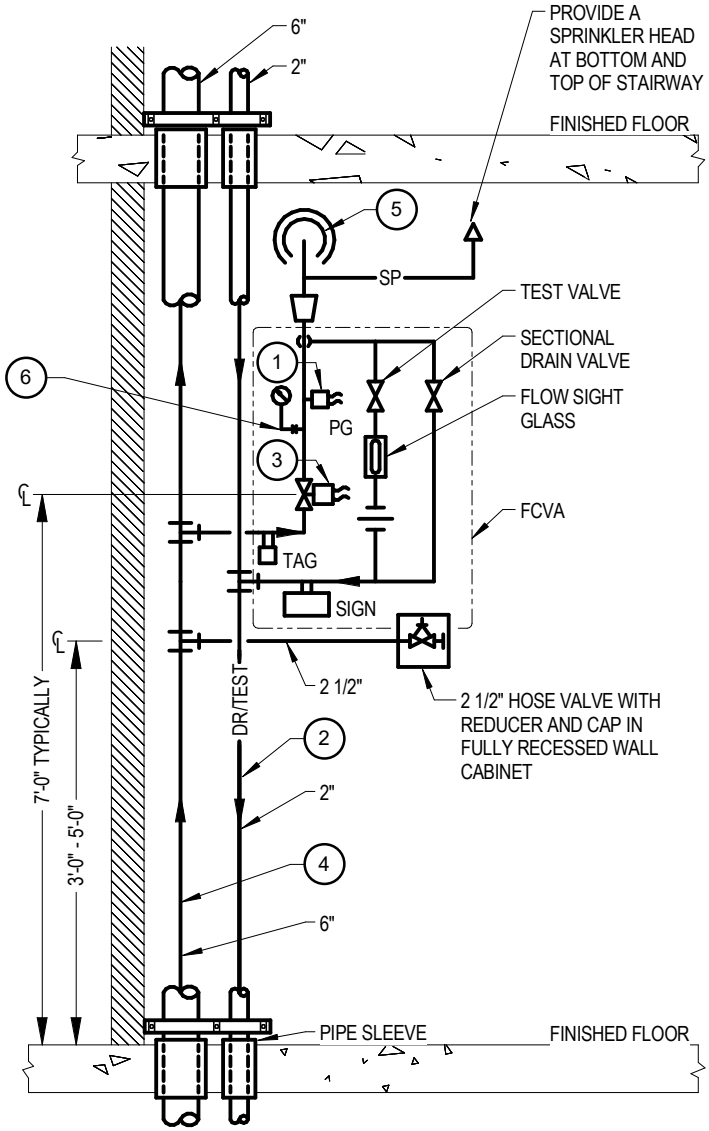

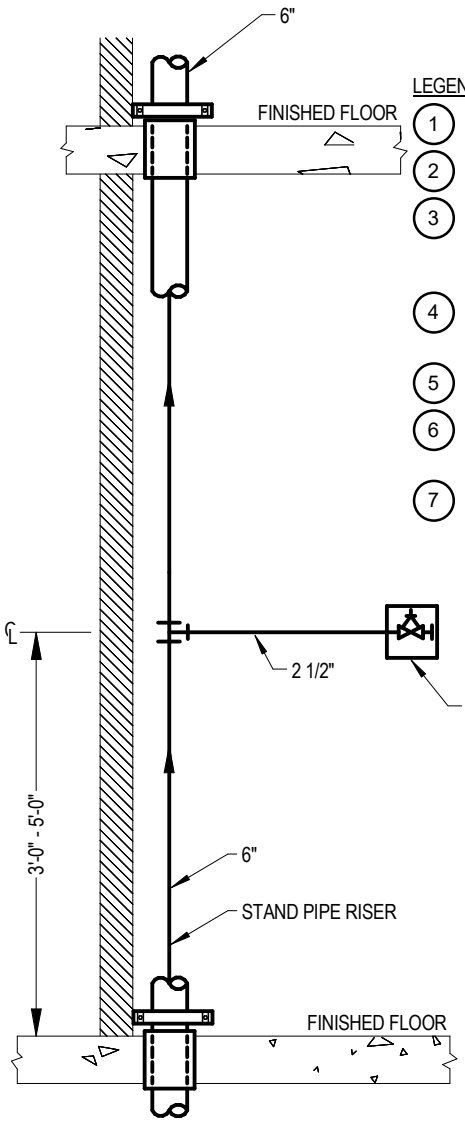

LEGEND

1. FLOW SWITCH
2. DRAIN RISER
3. INDICATING - TYPE FLOOR CONTROL VALVE WITH SUPERVISORY SWITCH
4. COMBINATION STANDPIPE & SPRINKLER RISER
5. SPRINKLER FEED MAIN
6. PRESSURE GAUGE WITH PETCOCK
7. UNION WITH CORROSION-RESISTANT ORIFICE GIVING FLOW EQUIVALENT TO THE SMALLEST SPRINKLER ORIFICE IN THE SYSTEM

COMBINATION SPRINKLER/STANDPIPE RISER & STANDPIPE RISER

NO SCALE

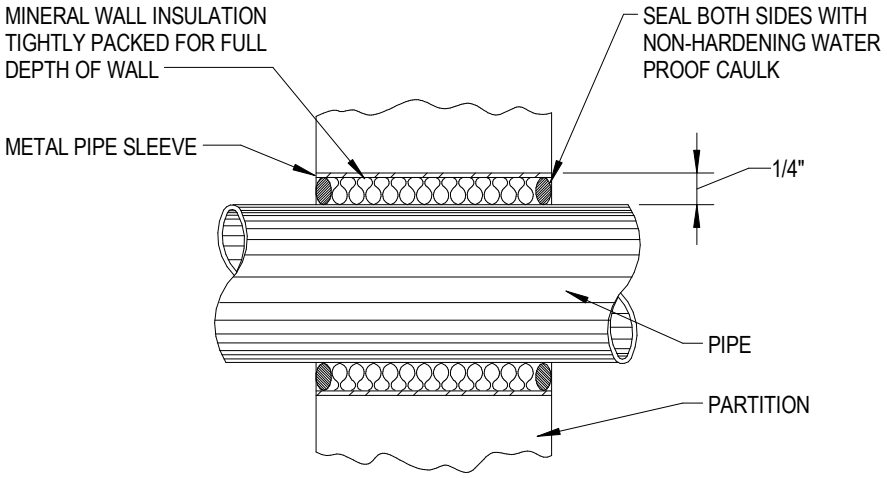

PIPE PENETRATION THRU NON-FIRE RATED WALL

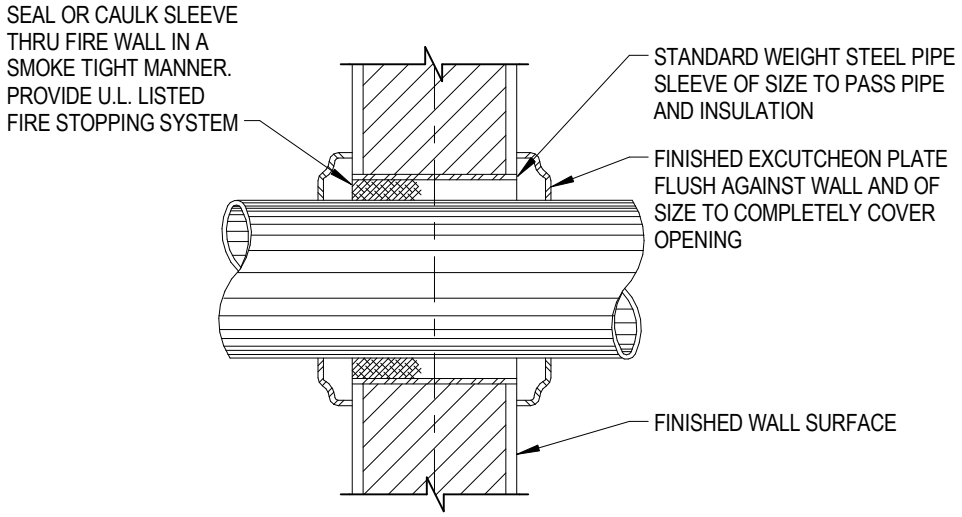

PIPE THRU FIRE RATED WALL OR FLOOR

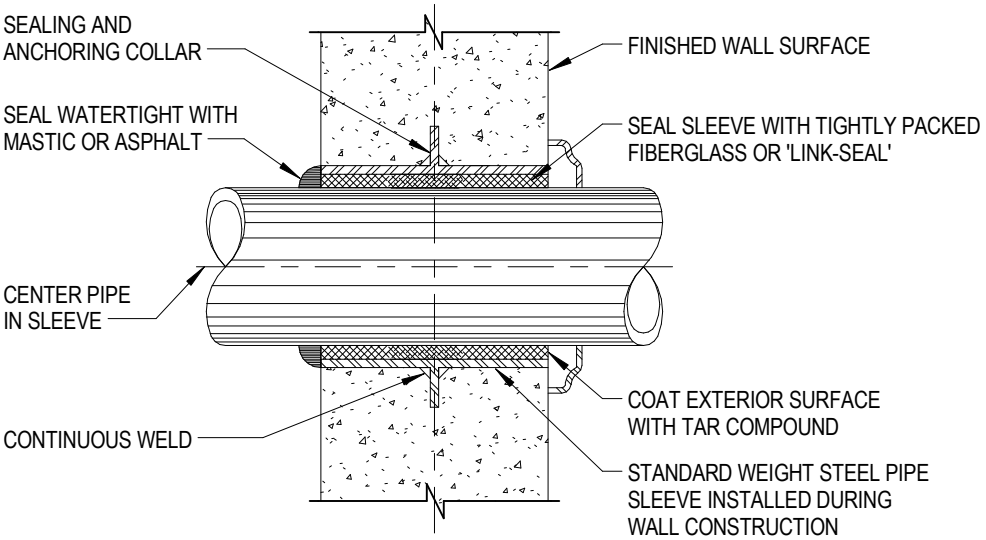

PIPE THRU EXTERIOR WALL

PIPE PENETRATIONS

NO SCALE

REVISION DATE: 02/04/2019
REVISED BY: JLS & ALT

GP00

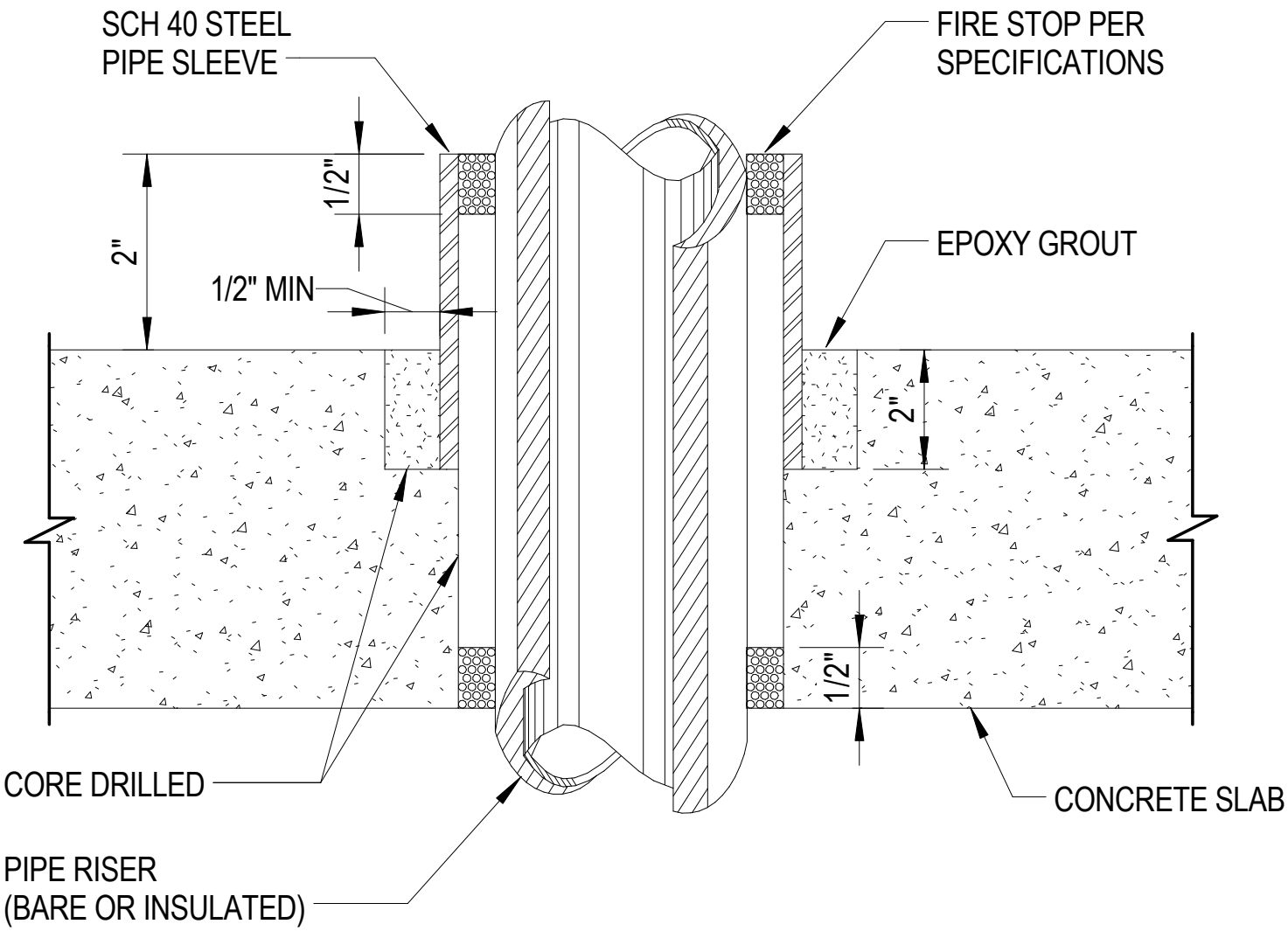

CORE DRILL AND SLEEVE DIAMETERS AS REQUIRED TO ACCOMODATE PIPE, PIPE INSULATION, AND FIRE STOP SYSTEM - ALL THAT APPLY

PIPE PENETRATION DETAIL THRU EXISTING FLOOR

NO SCALE

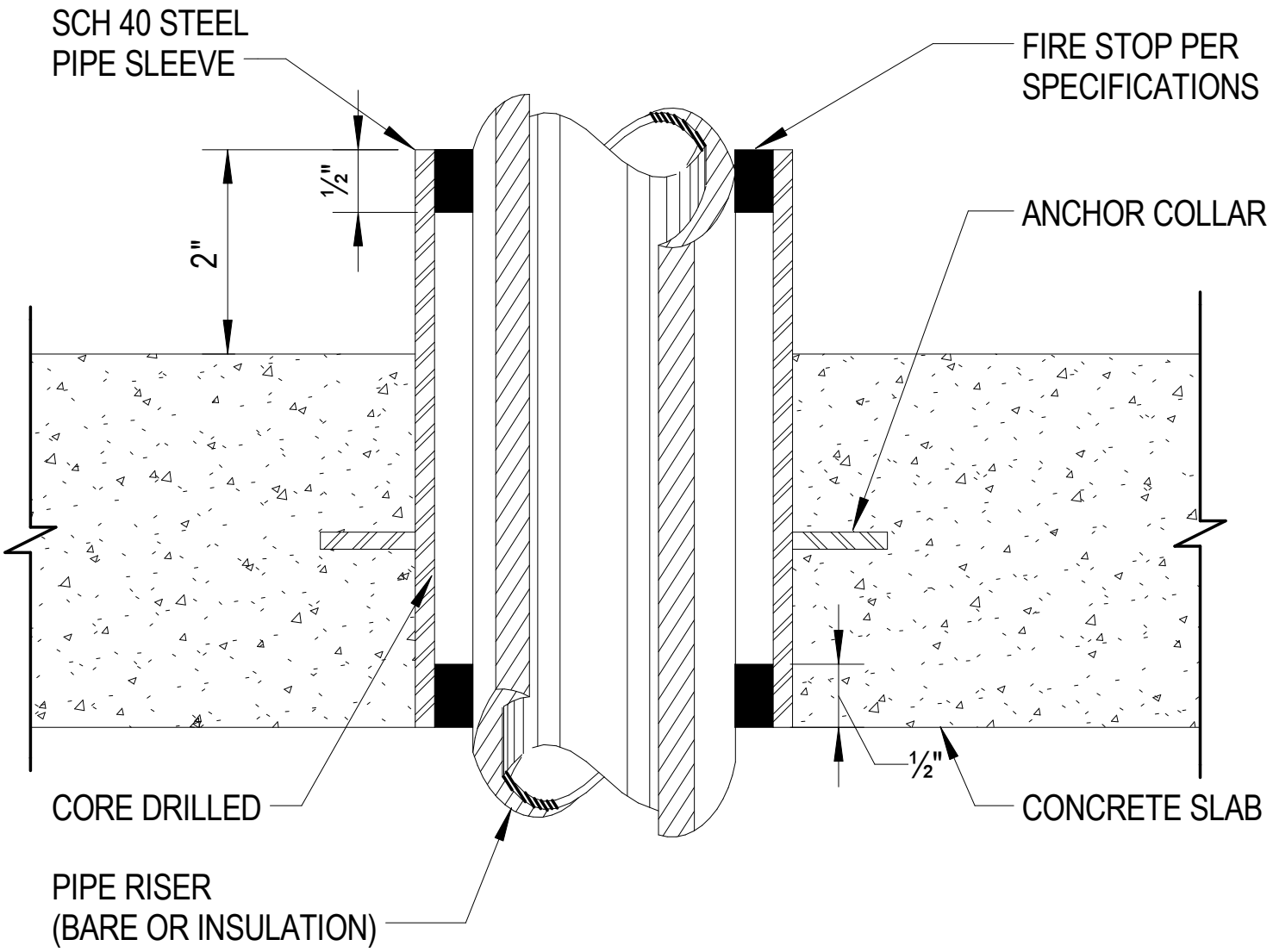

CORE DRILL AND SLEEVE DIAMETERS AS REQUIRED TO ACCOMODATE PIPE, PIPE INSULATION, AND FIRE STOP SYSTEM - ALL THAT APPLY.

PIPE PENETRATION DETAIL THRU NEW FLOOR

NO SCALE

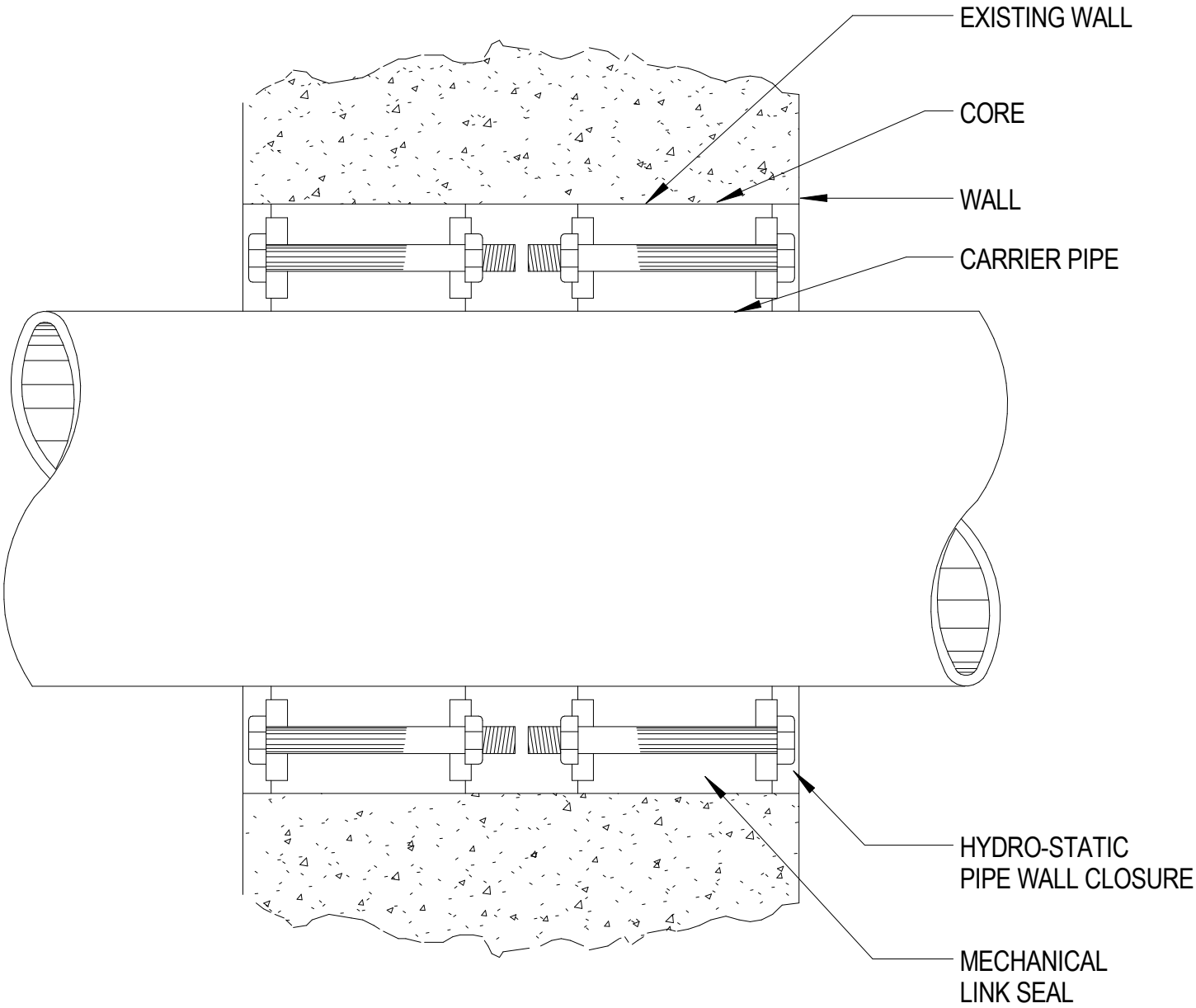

PIPE PENETRATION THROUGH EXISTING EXTERIOR WALL BELOW GRADE

NO SCALE

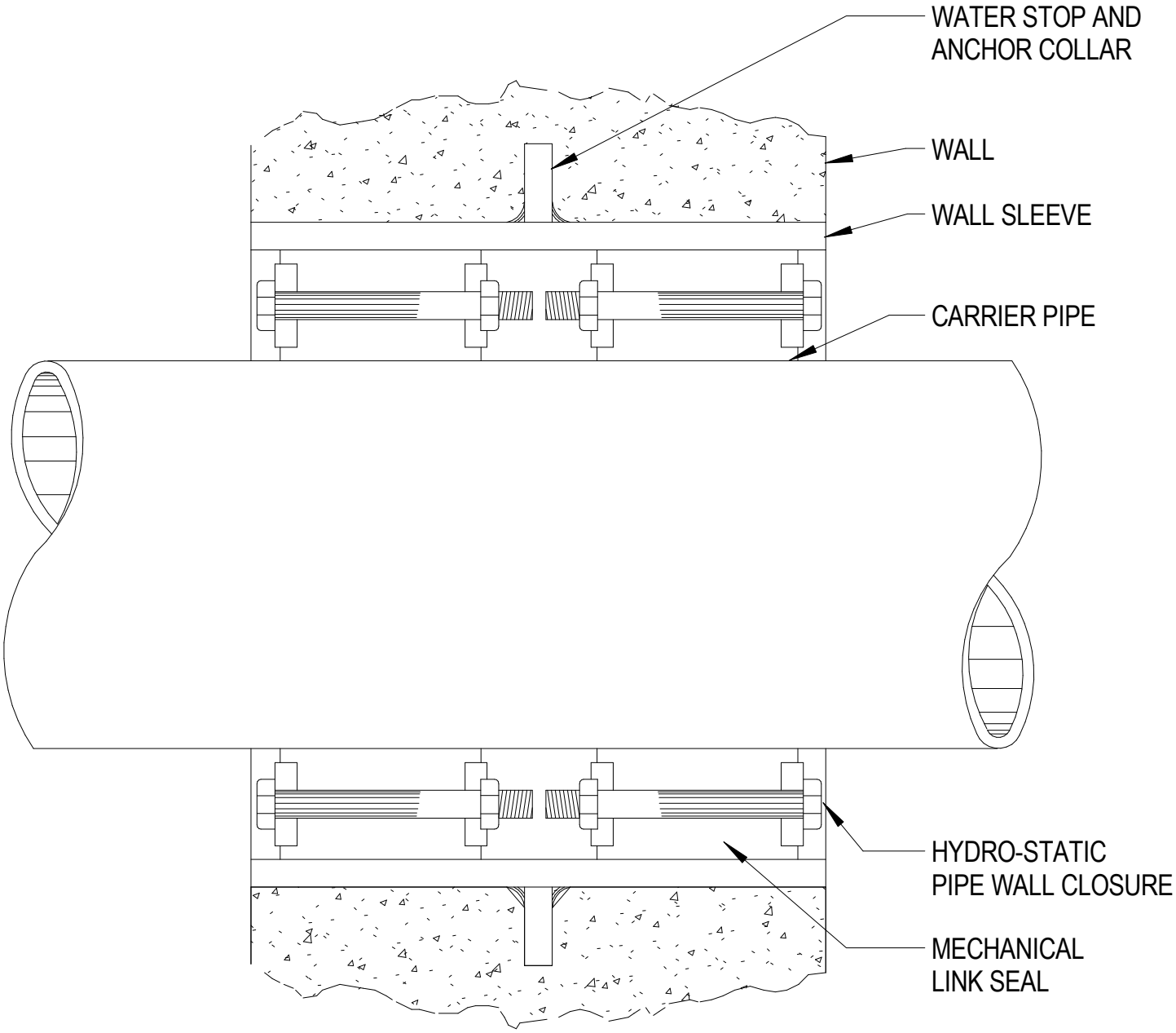

PIPE PENETRATION THROUGH NEW EXTERIOR WALL BELOW GRADE

NO SCALE

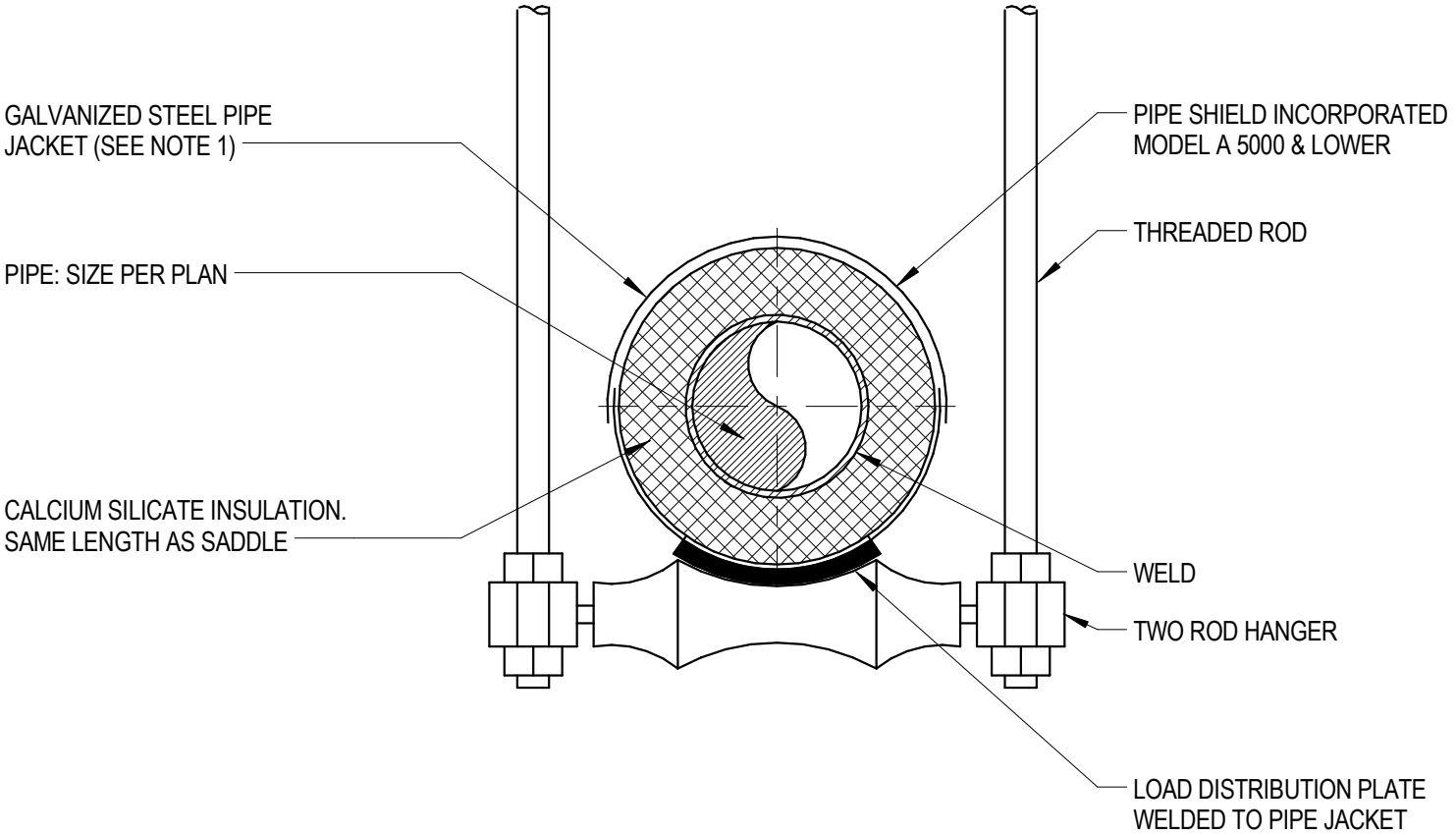

PIPE SUPPORT DETAIL (4" AND LARGER)

NO SCALE

NOTES:

1. PROVIDE GALVANIZED SHEET METAL INSULATION JACKET AS FOLLOWS:

PIPE SIZE:	LENGTH:	GAUGE:
4" TO 7"	18"	16
8" AND UP	24"	12

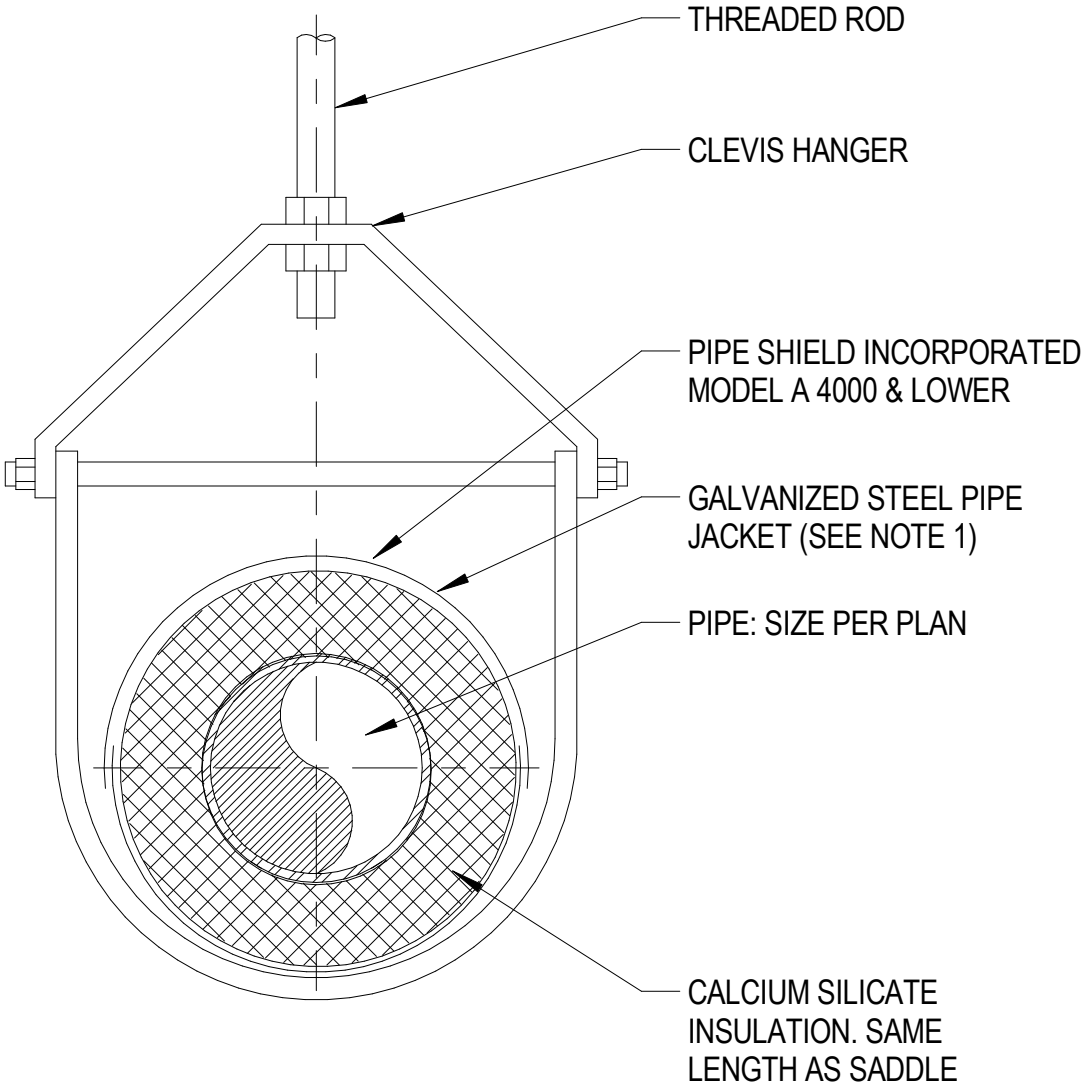

SINGLE PIPE SUPPORT (LESS THAN 4")

NO SCALE

NOTES:

1. PROVIDE GALVANIZED SHEET METAL INSULATION JACKET AS FOLLOWS:

PIPE SIZE:	LENGTH:	GAUGE:
2" TO 4"	12"	18

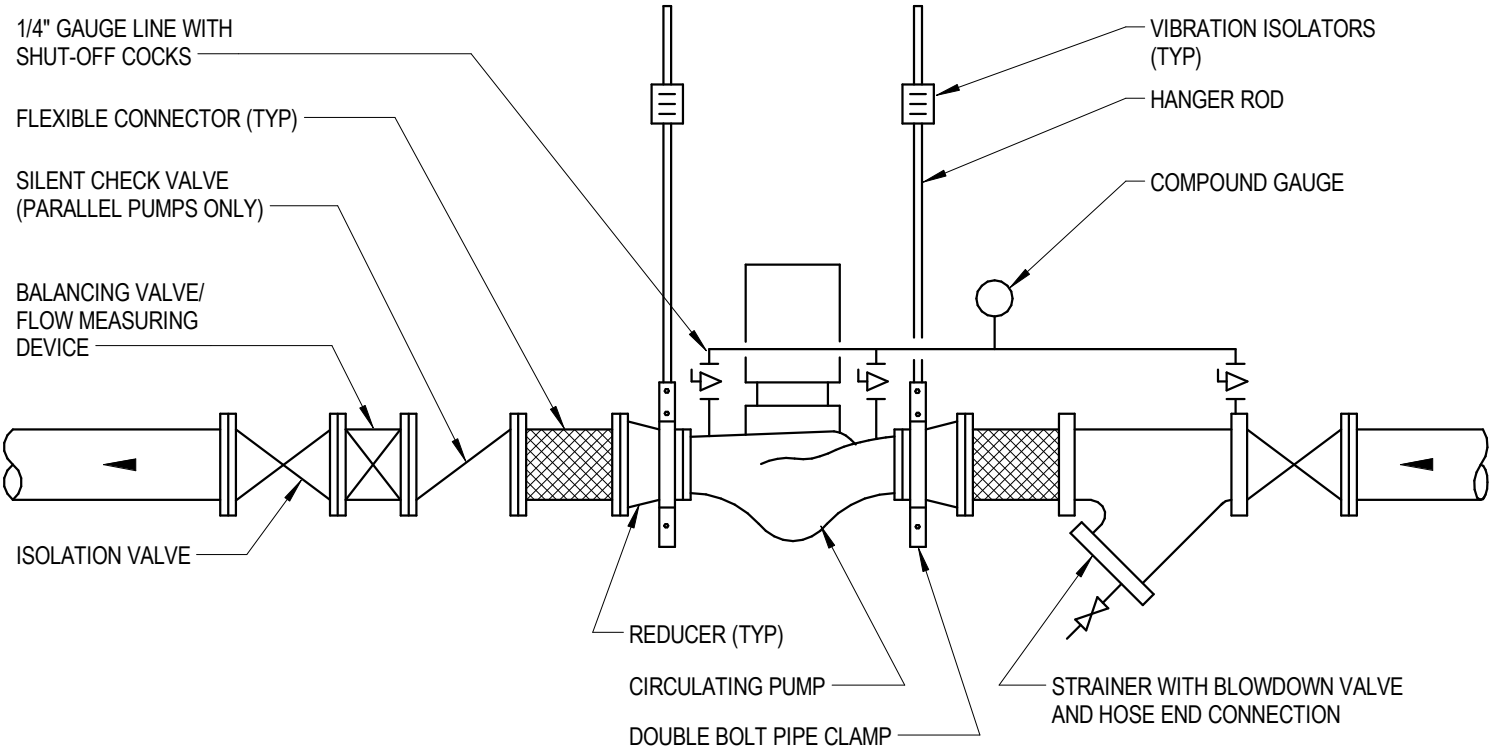

INLINE CIRCULATING PUMP DETAIL

NO SCALE

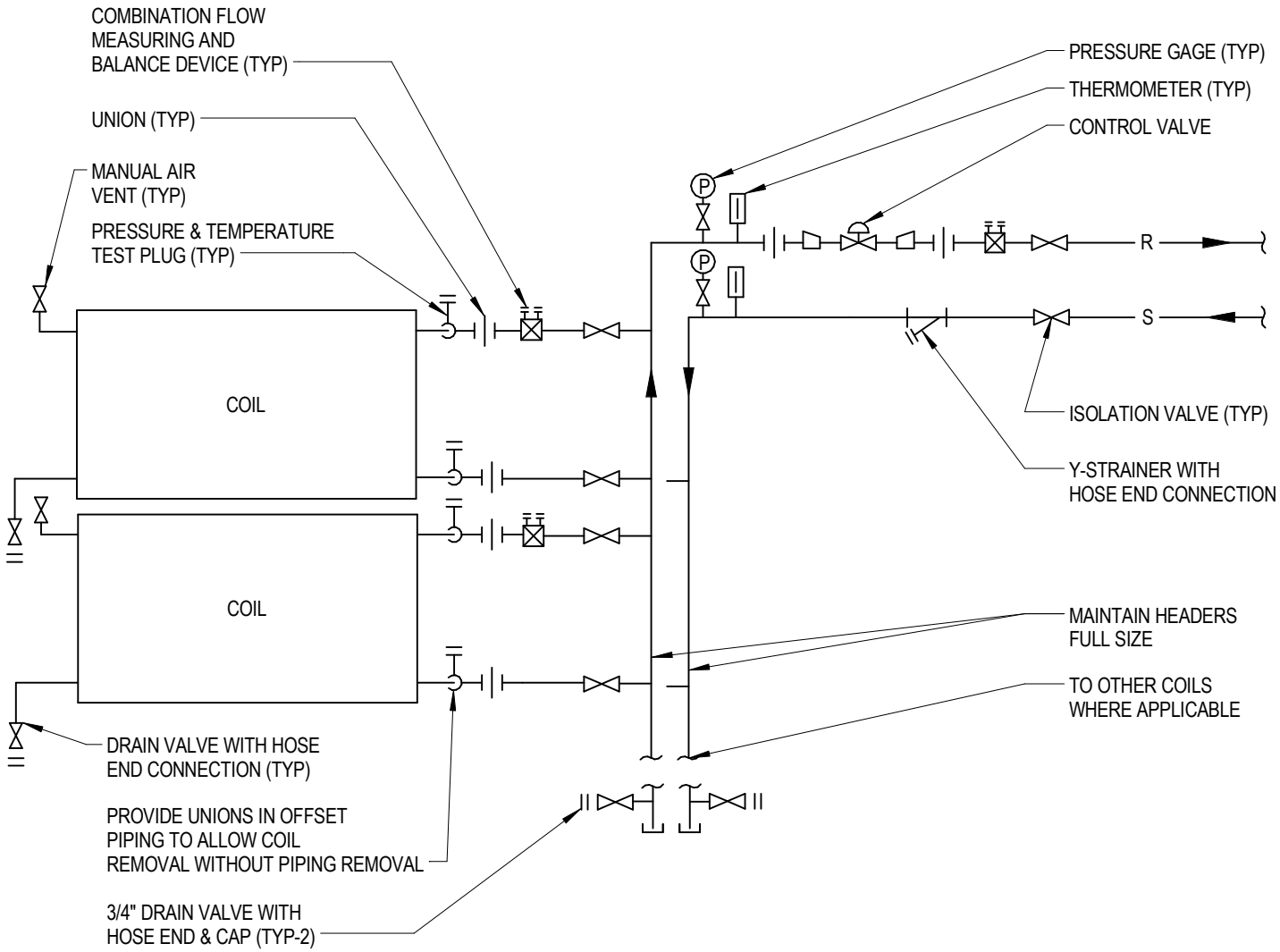

HYDRONIC WATER COIL WITH 2 - WAY CONTROL VALVE PIPING DIAGRAM

NO SCALE

(TYP-AHU-X, AHU-X)

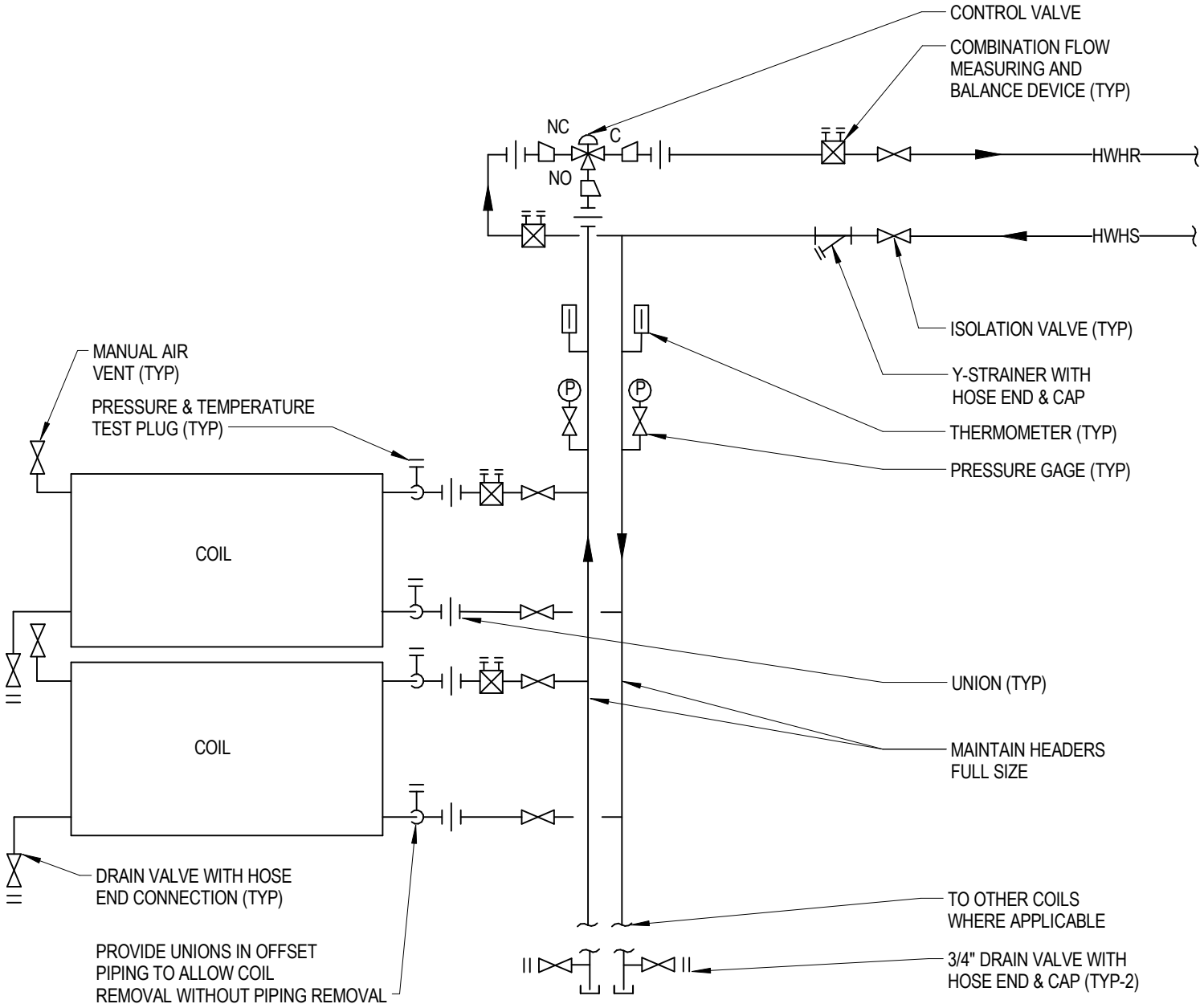

HOT WATER HEATING COIL WITH 3-WAY CONTROL VALVE PIPING DIAGRAM

NO SCALE

(TYP - AHU-X, AHU-X)

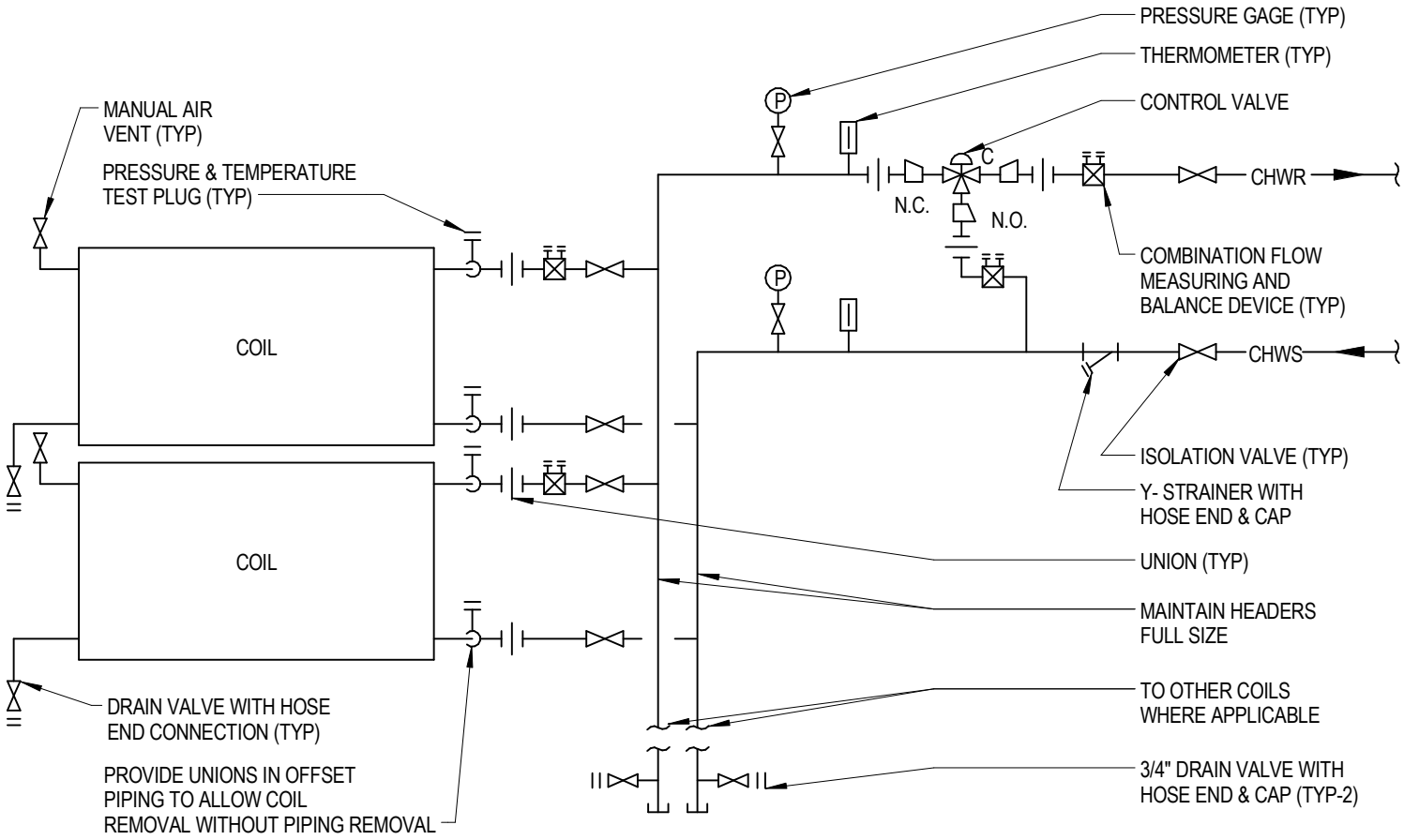

CHILLED WATER COOLING COIL WITH 3- WAY CONTROL VALVE

NO SCALE

(TYP - AHU-X, AHU-X)

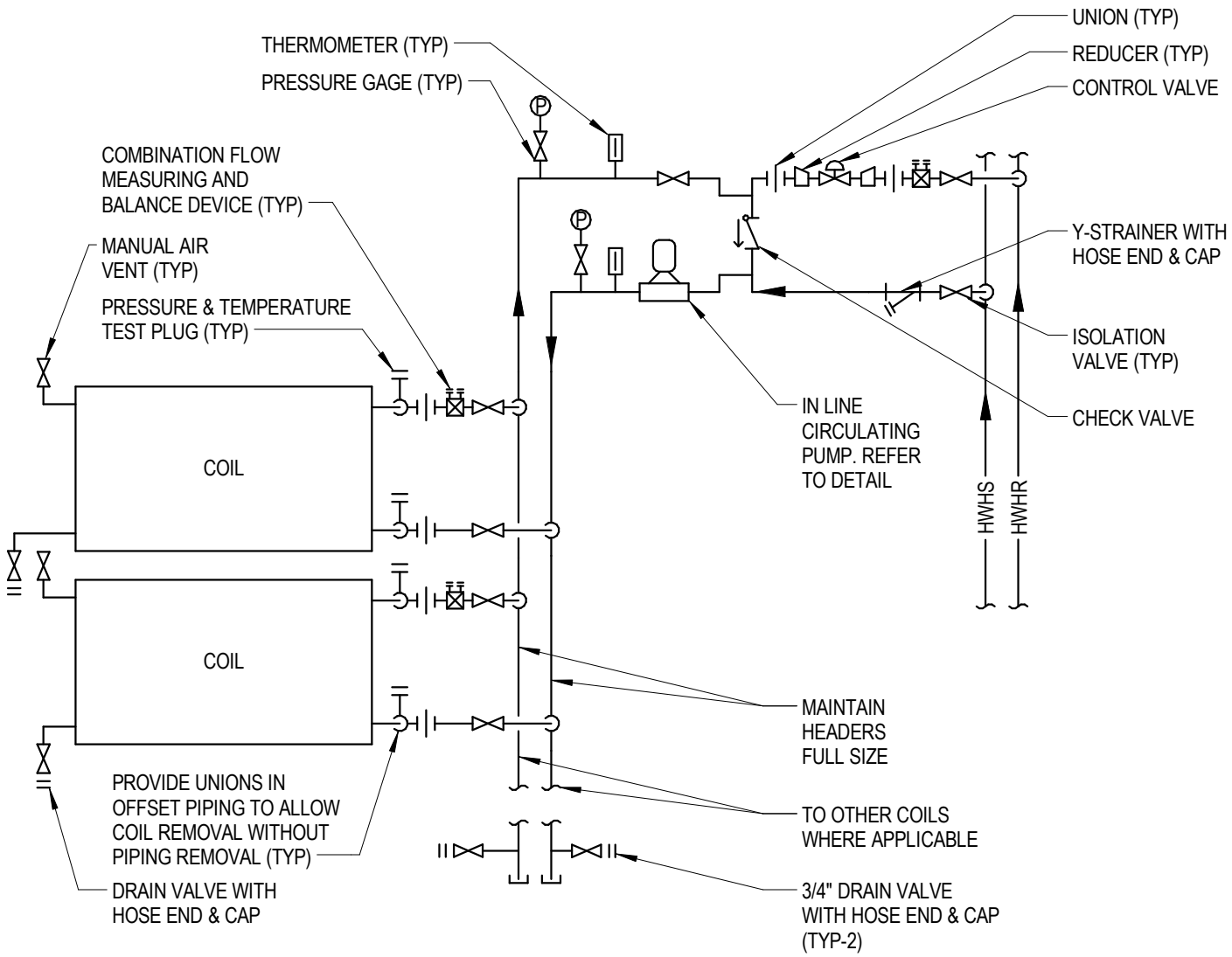

HOT WATER HEATING COIL WITH CIRCULATING PUMP AND 2-WAY CONTROL VALVE PIPING DIAGRAM

NO SCALE

(TYP - AHU-X, AHU-X)

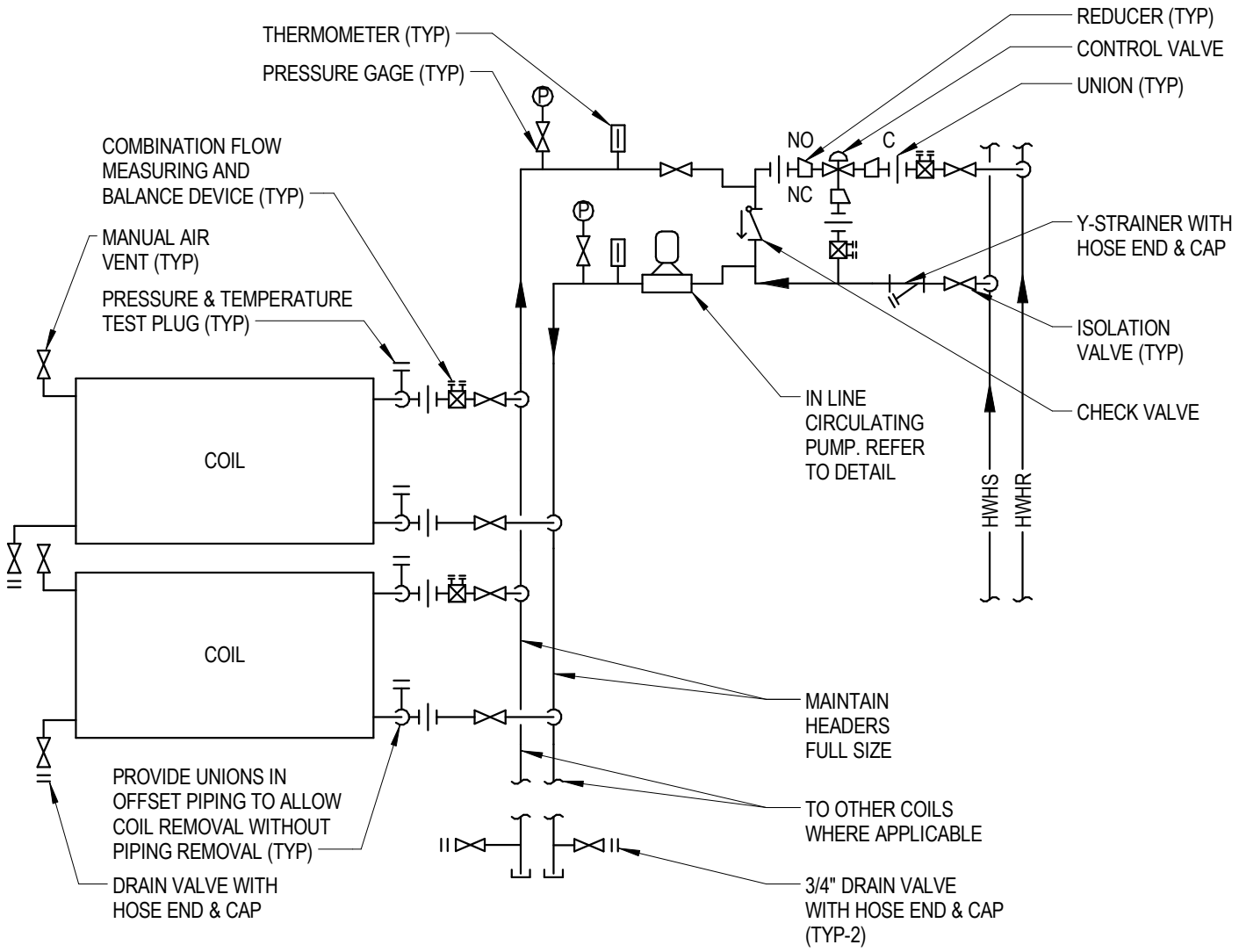

HOT WATER HEATING COIL WITH CIRCULATING PUMP AND 3-WAY CONTROL VALVE PIPING DIAGRAM

NO SCALE

(TYP - AHU-X, AHU-X)

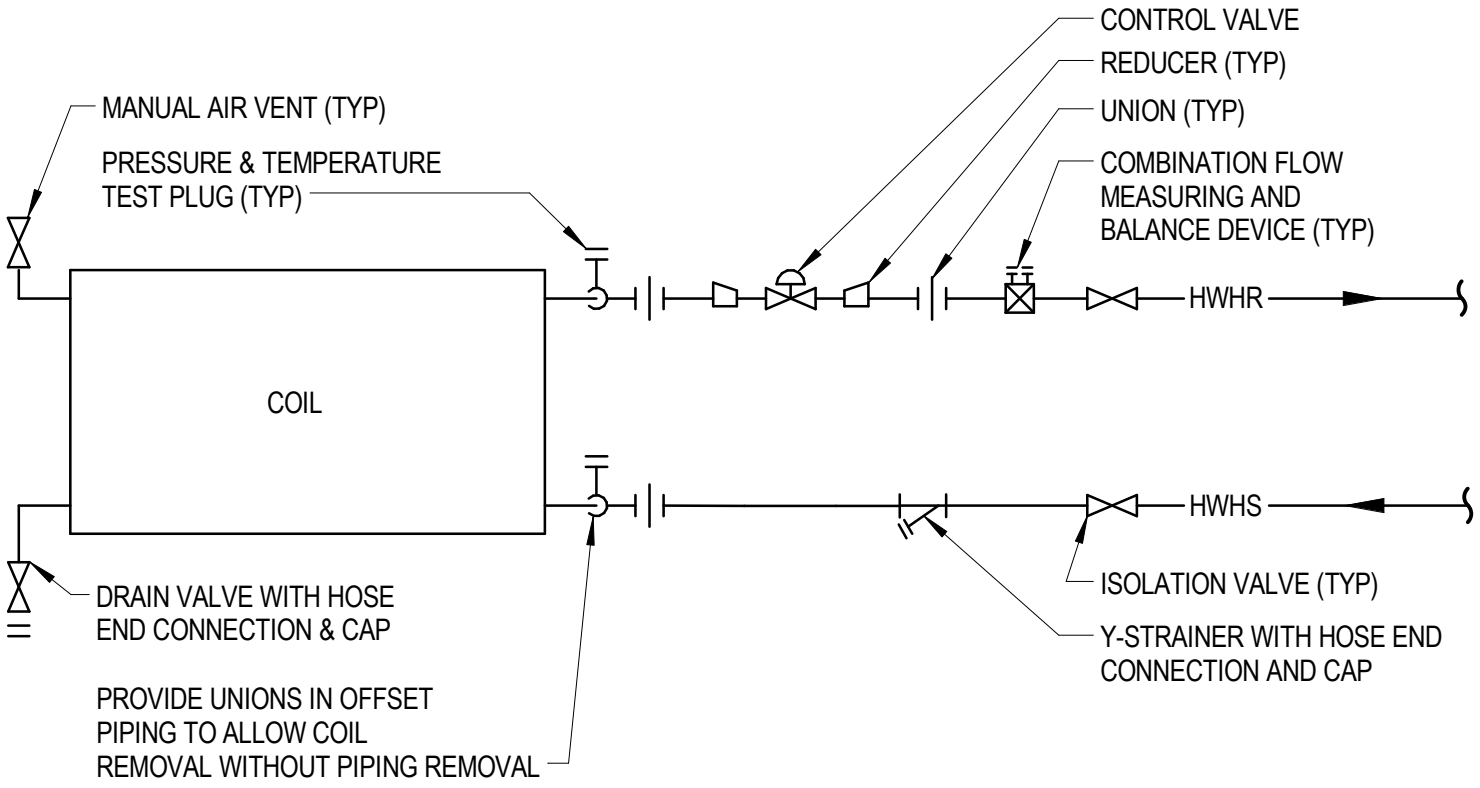

TERMINAL HOT WATER HEATING COIL WITH 2 - WAY CONTROL VALVE

NO SCALE

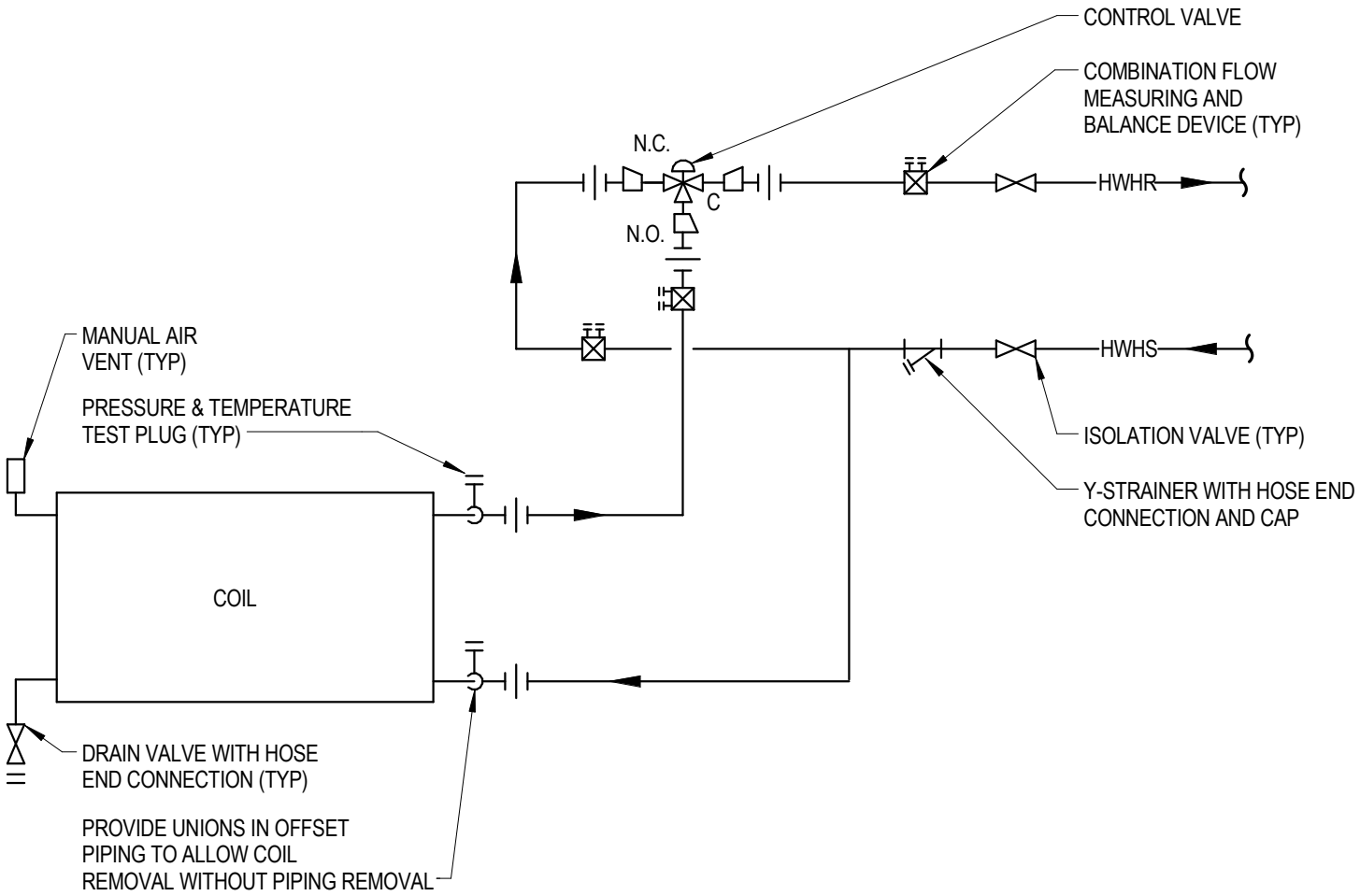

TERMINAL HOT WATER HEATING COIL WITH 3-WAY CONTROL VALVE

NO SCALE

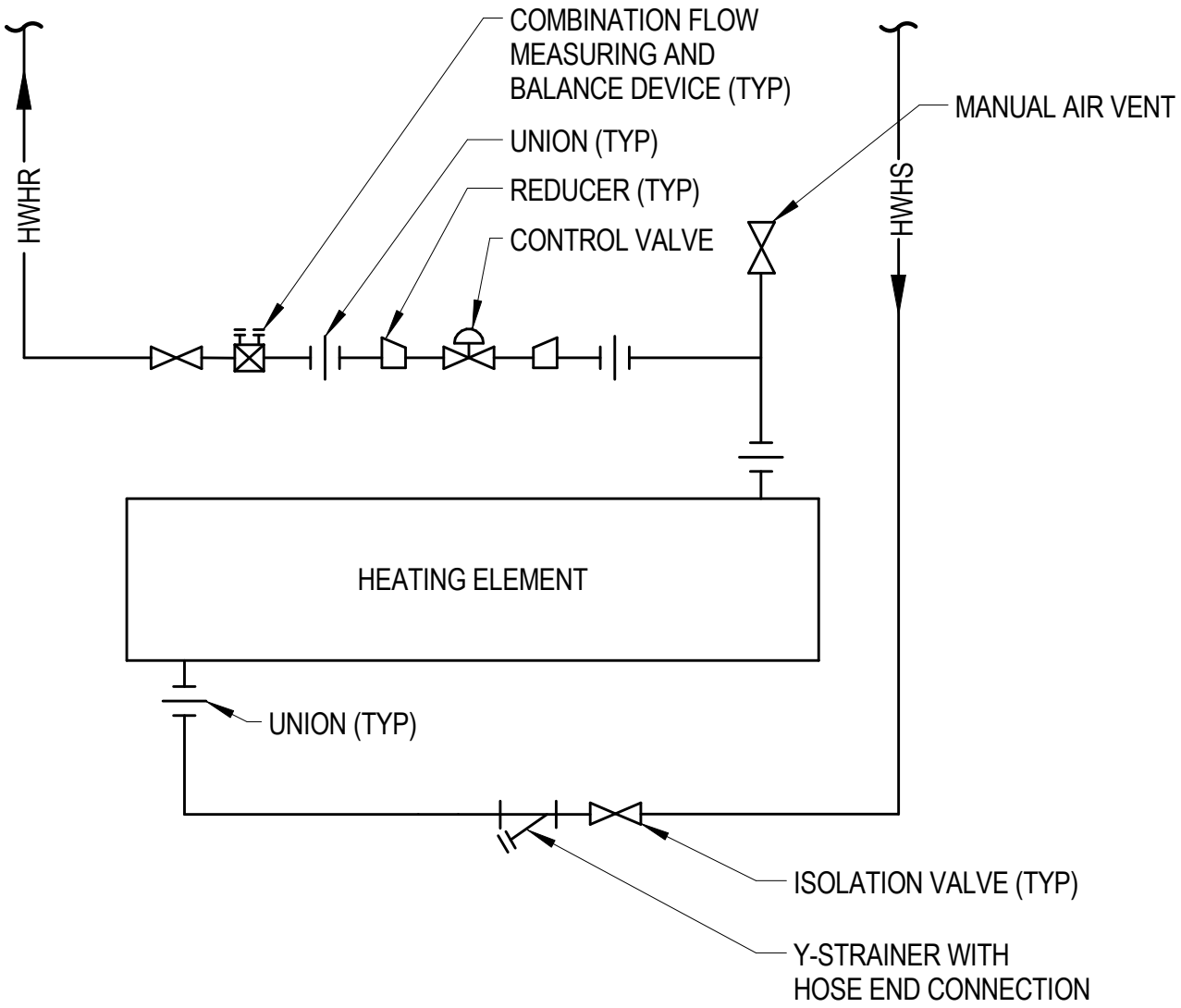

HOT WATER CONVECTOR OR CABINET UNIT HEATER PIPING DIAGRAM

NO SCALE

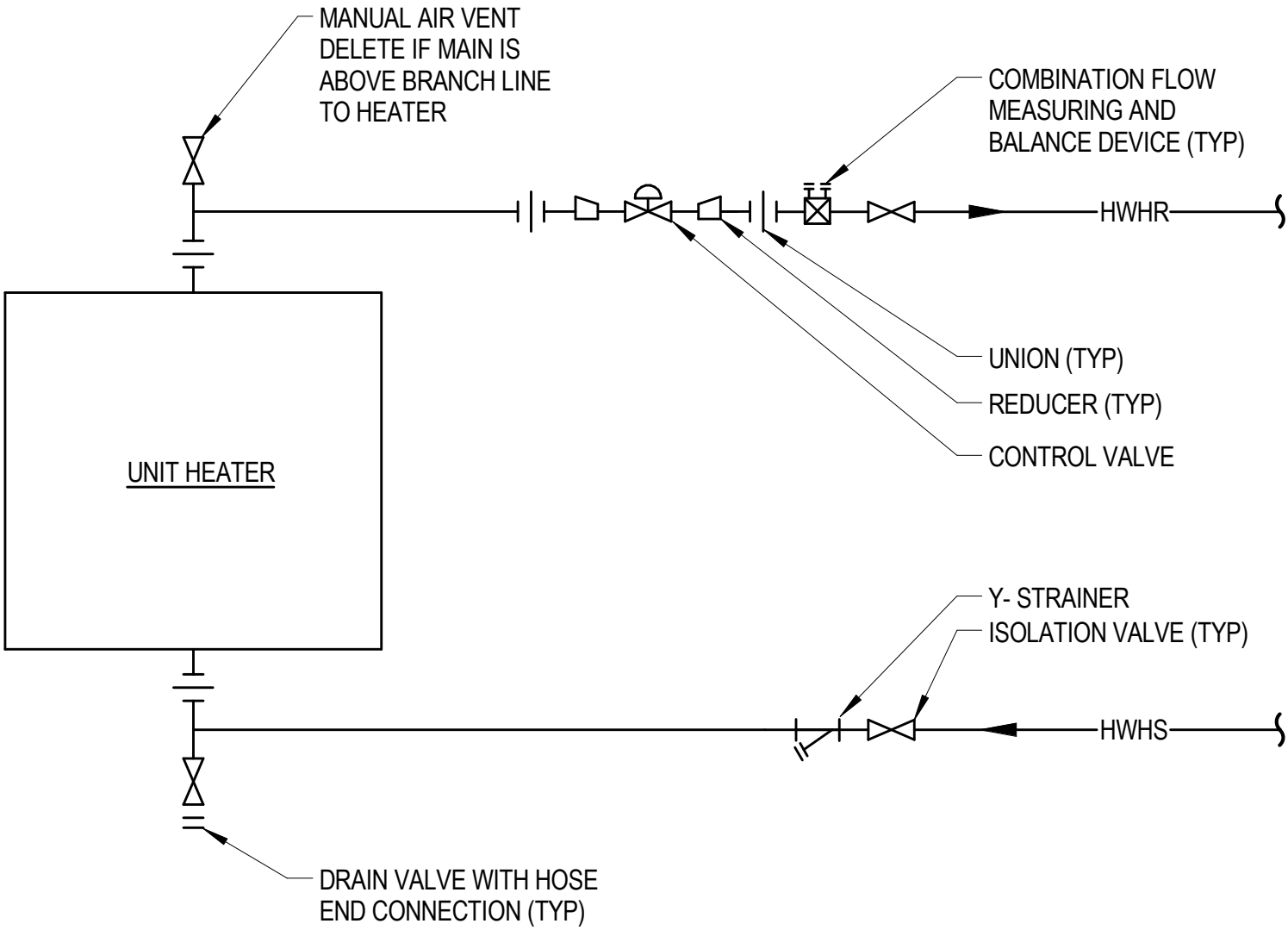

NOTE: PIPING SIMILAR FOR SIDE CONNECTION HEATERS.

HOT WATER UNIT HEATER PIPING DIAGRAM

NO SCALE

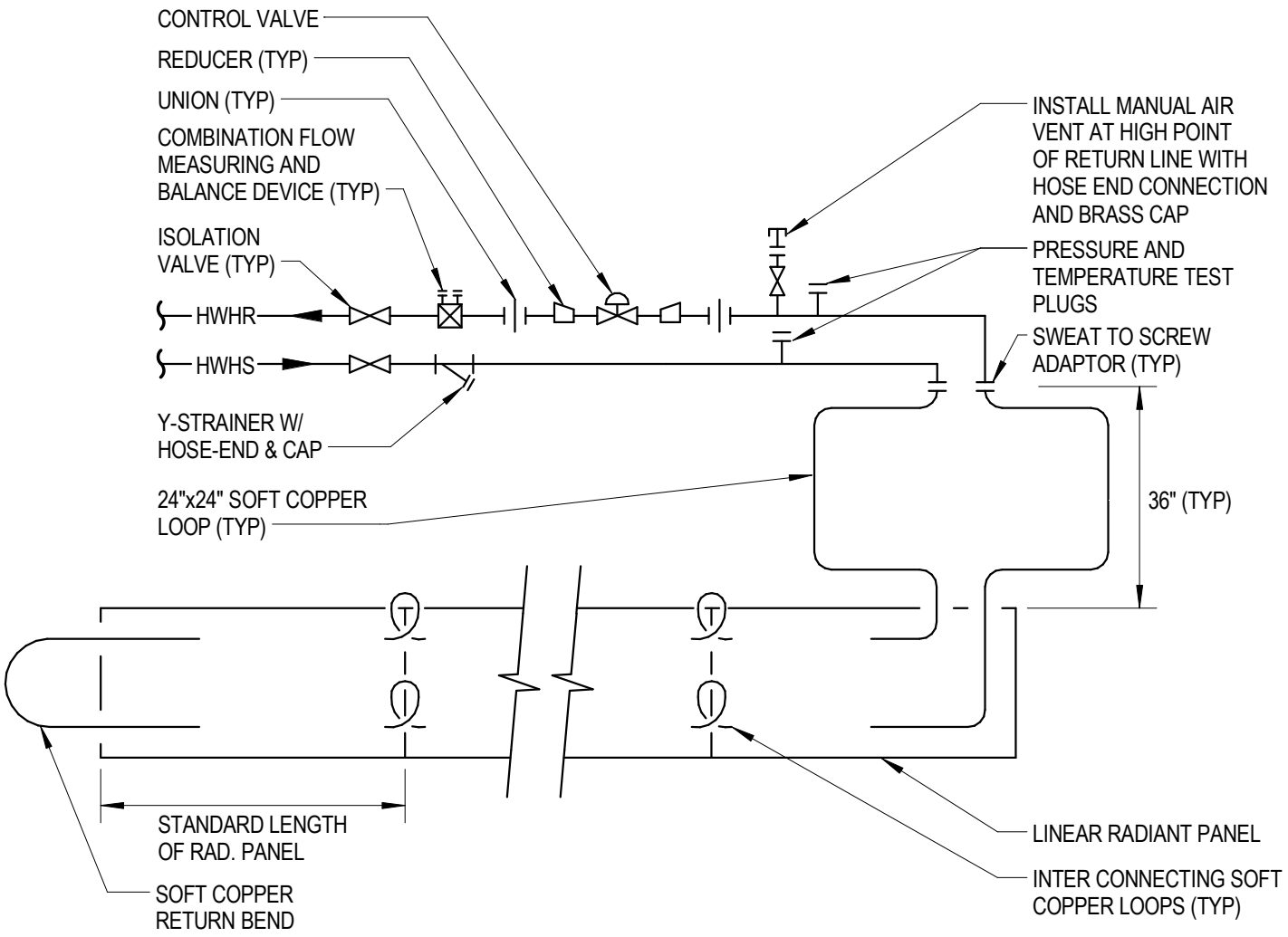

NOTE: PIPE CONNECTIONS FOR ODD NUMBER OF PIPING PASSES SIMILAR

LINEAR RADIANT CEILING PANEL PIPING DIAGRAM

NO SCALE

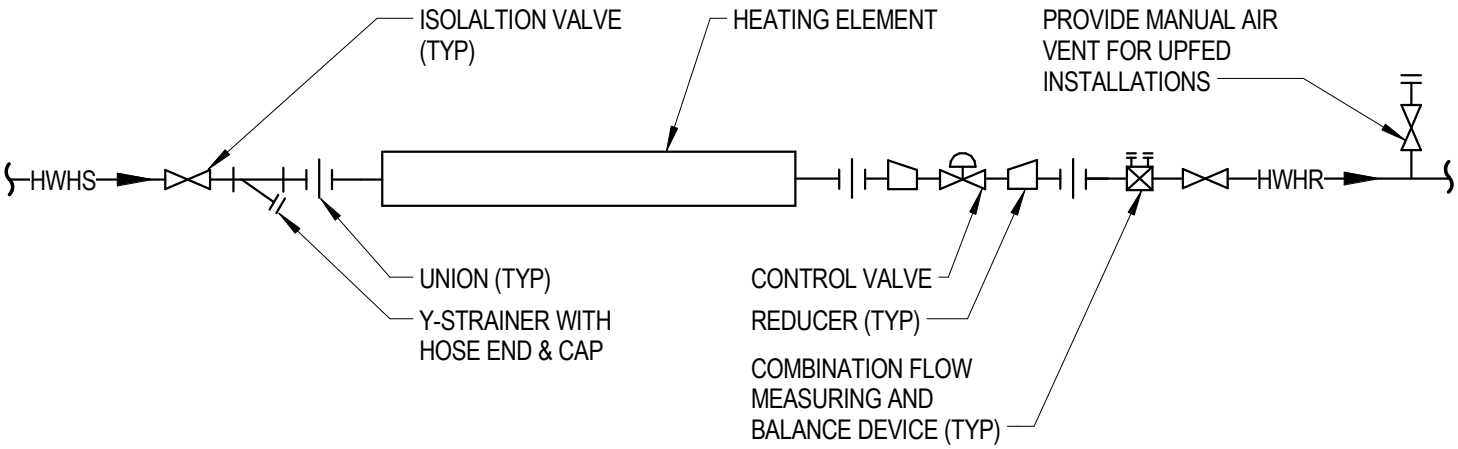

NOTE: COORDINATE ACCESS DOOR/PANEL LOCATION WITH CONTROL VALVE.

HOT WATER HEATING FINNED TUBE RADIATION PIPING DIAGRAM

NO SCALE

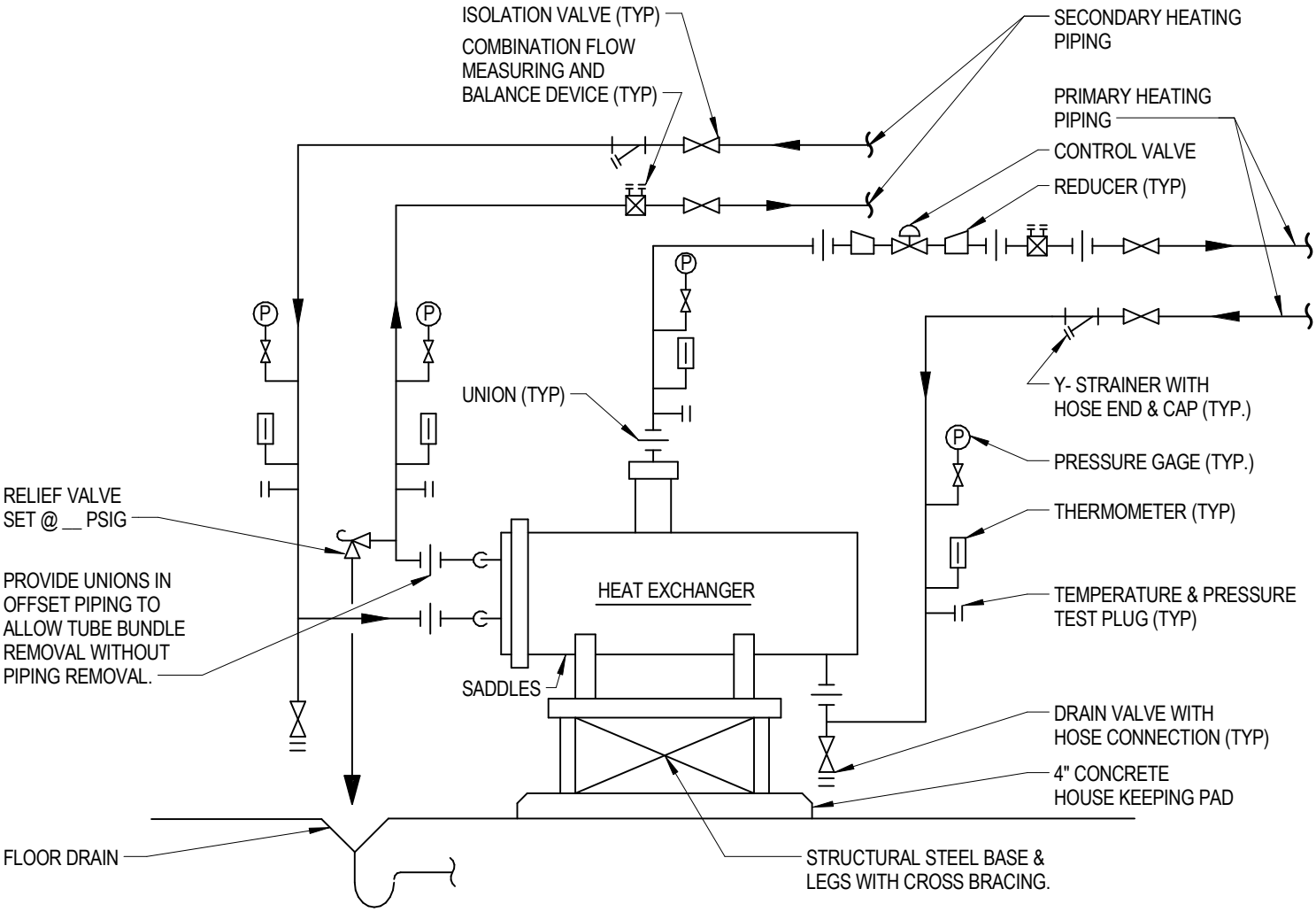

SHELL & TUBE HEAT EXCHANGER PIPING DIAGRAM

NO SCALE

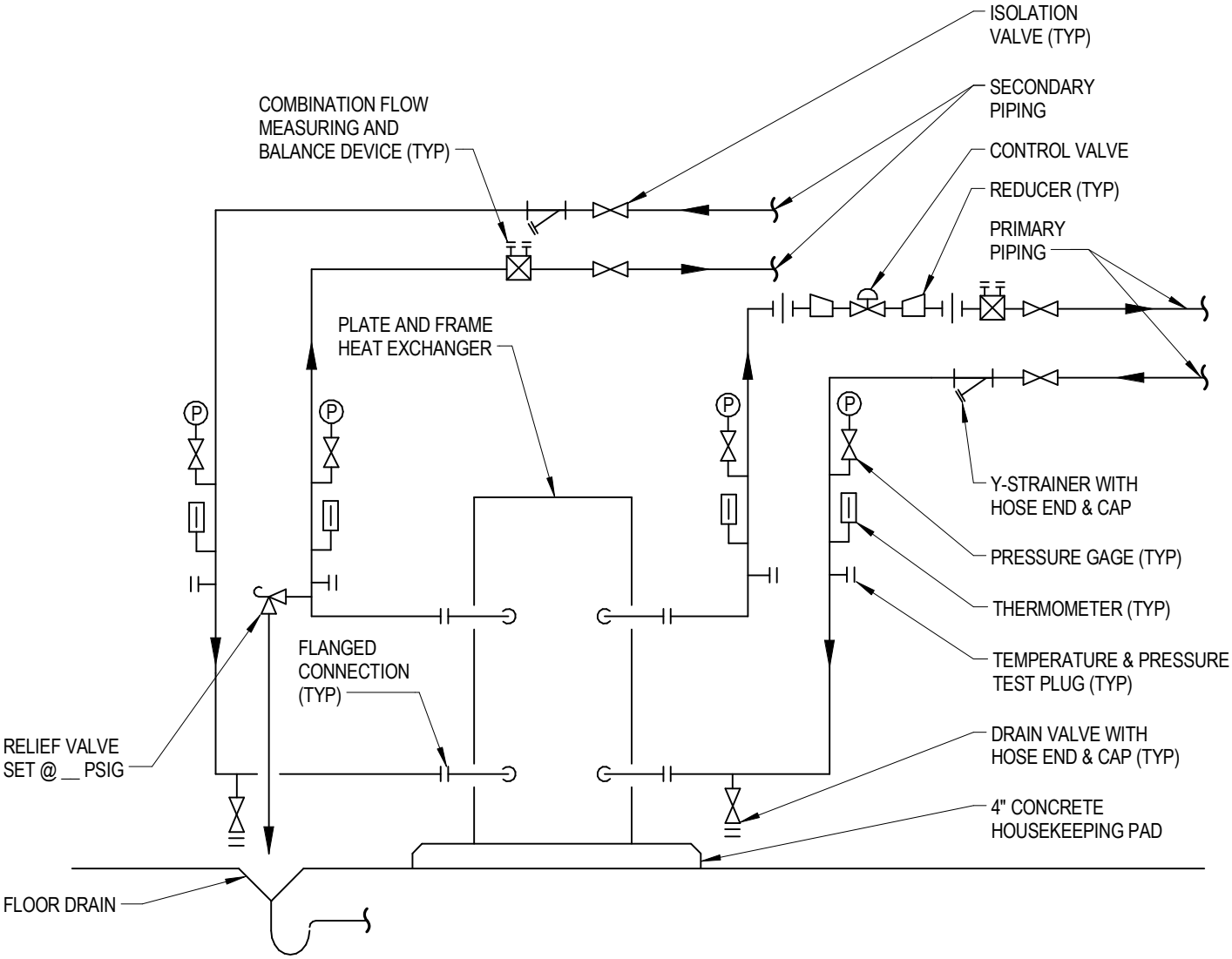

PLATE & FRAME HEAT EXCHANGER PIPING DIAGRAM

NO SCALE

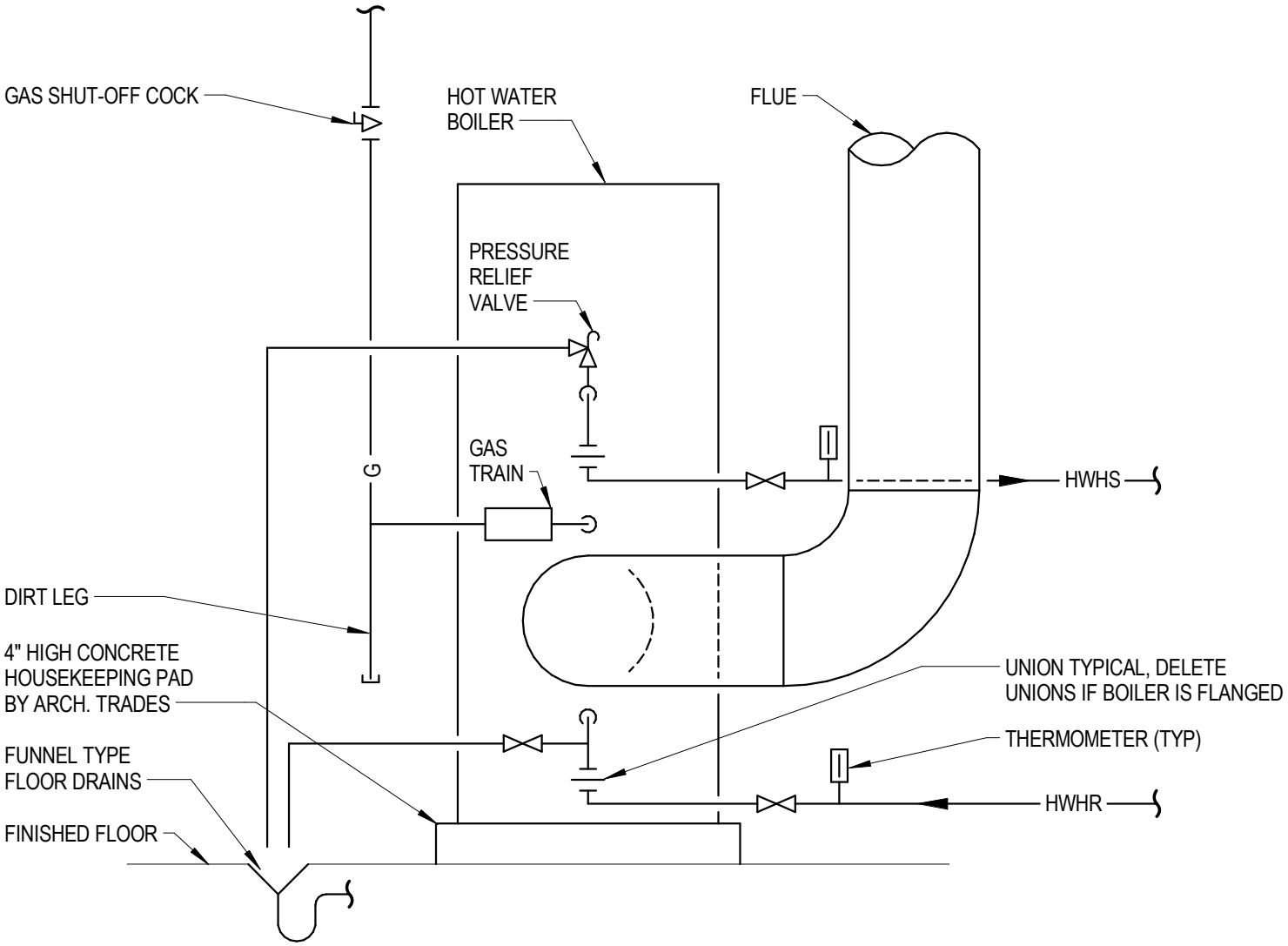

GAS FIRED MODULAR HOT WATER HEATING BOILER PIPING DIAGRAM

NO SCALE

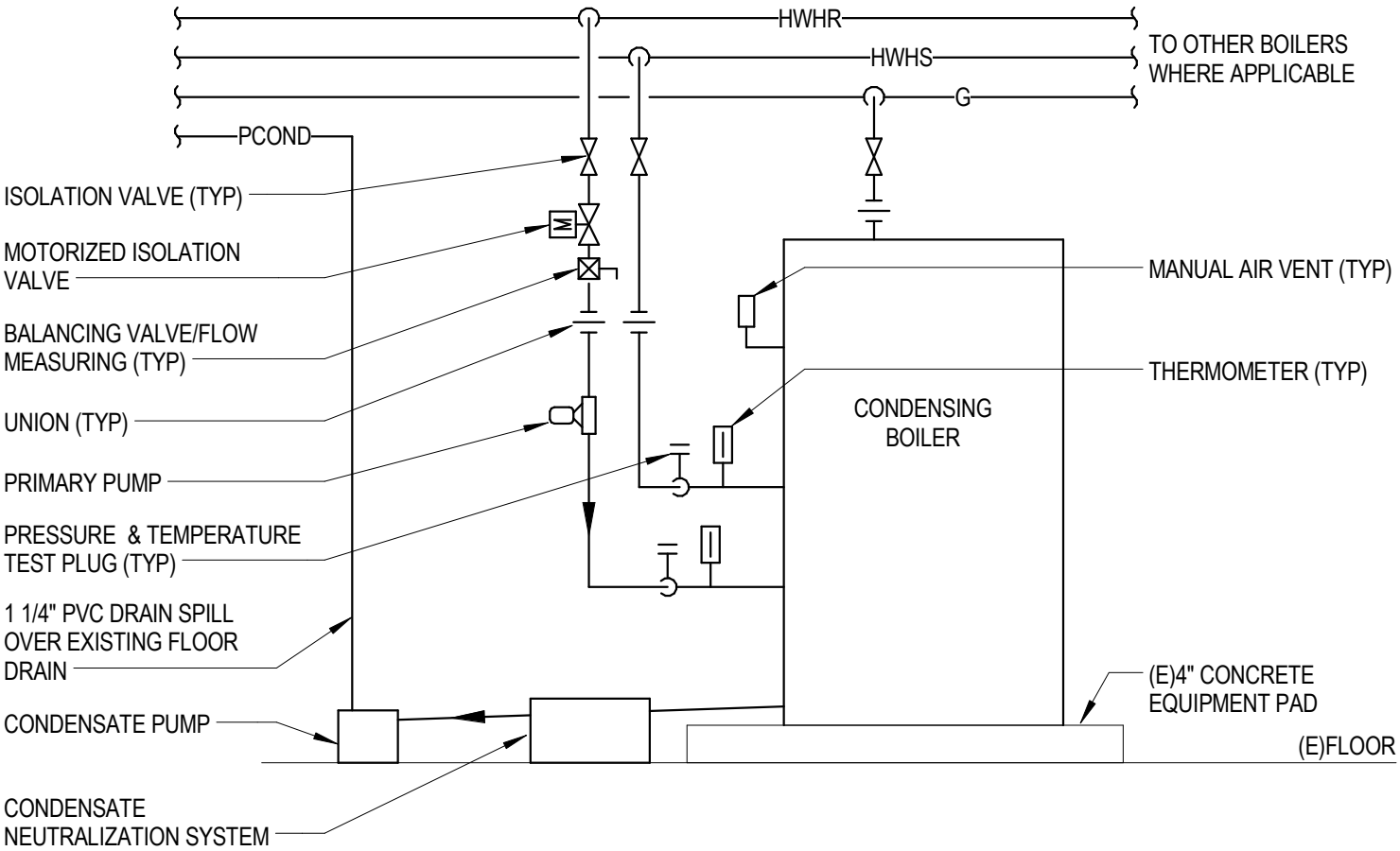

CONDENSING BOILER PIPING DIAGRAM

NO SCALE

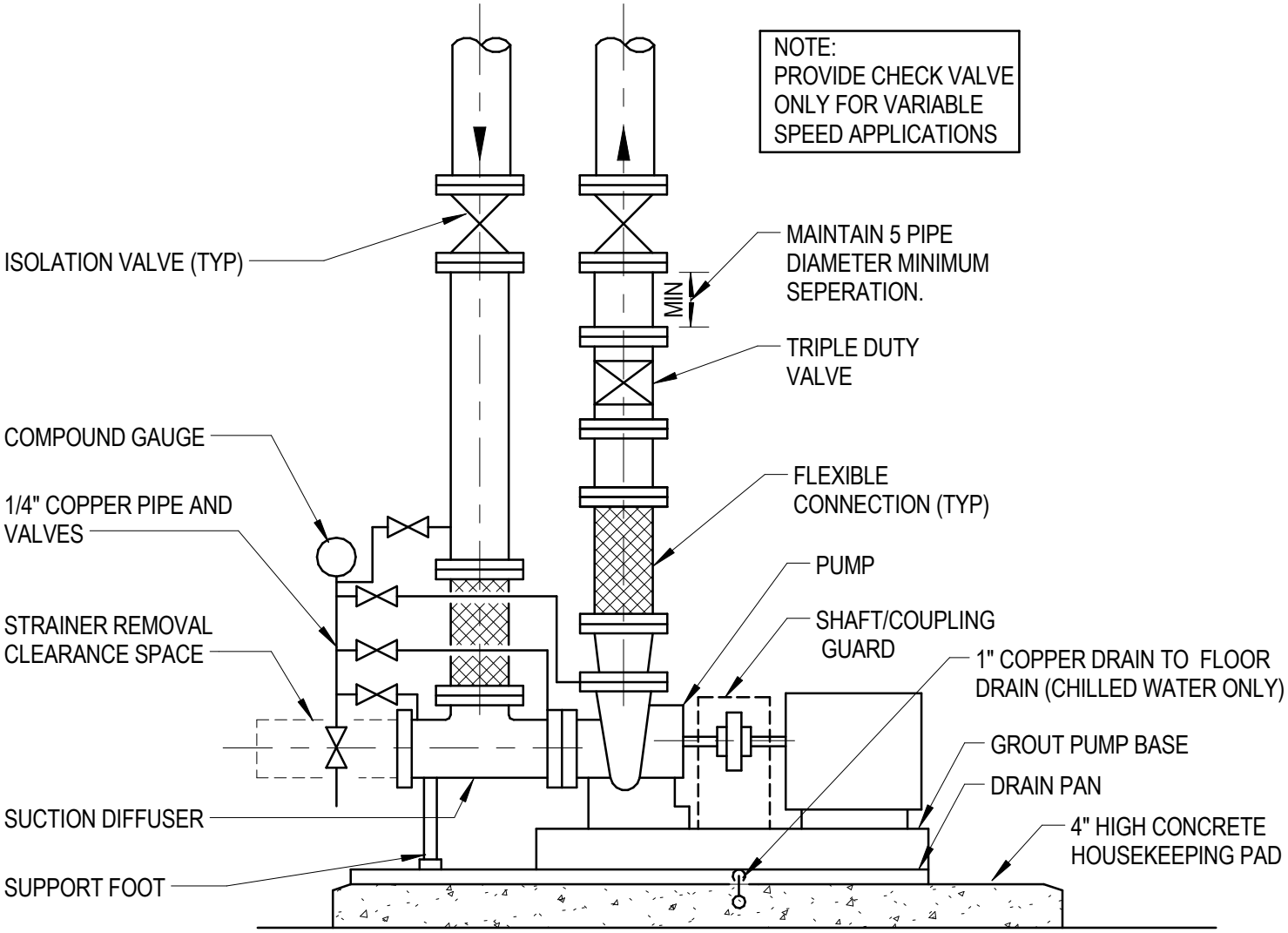

NOTE : AFTER LEAVING AND SECURING PUMP, FILL PUMP BASE WITH NON-SHRINK GROUT.

BASE MOUNTED END SUCTION PUMP PIPING DIAGRAM

NO SCALE

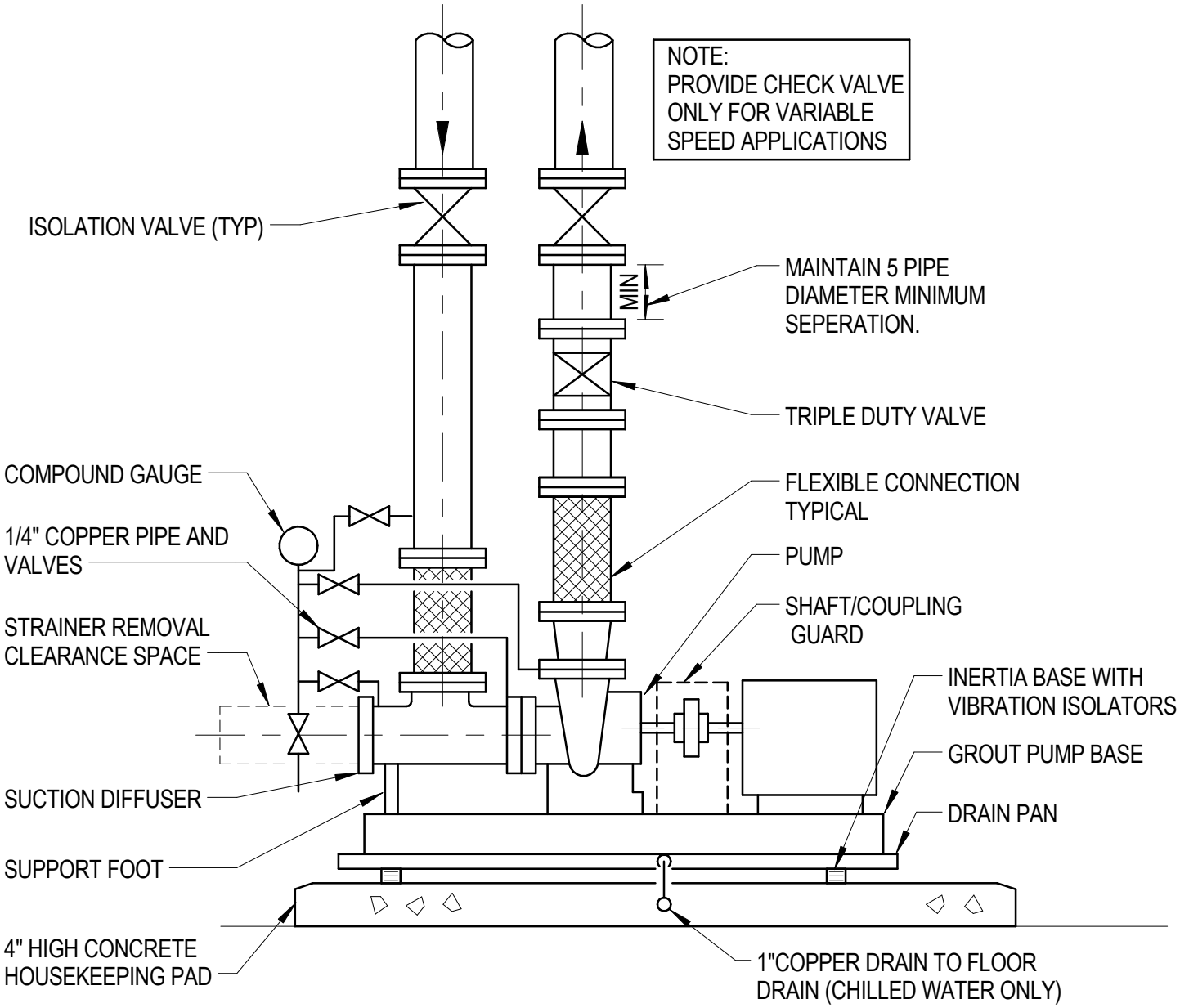

NOTES:

1. SUPPORT PIPING SO THAT THERE IS NO WEIGHT ON PUMP
2. AFTER LEAVING AND SECURING PUMP, FILL PUMP BASE WITH NON-SHRINK GROUT.

BASE MOUNTED END SUCTION PUMP ISOLATED PIPING DIAGRAM

NO SCALE

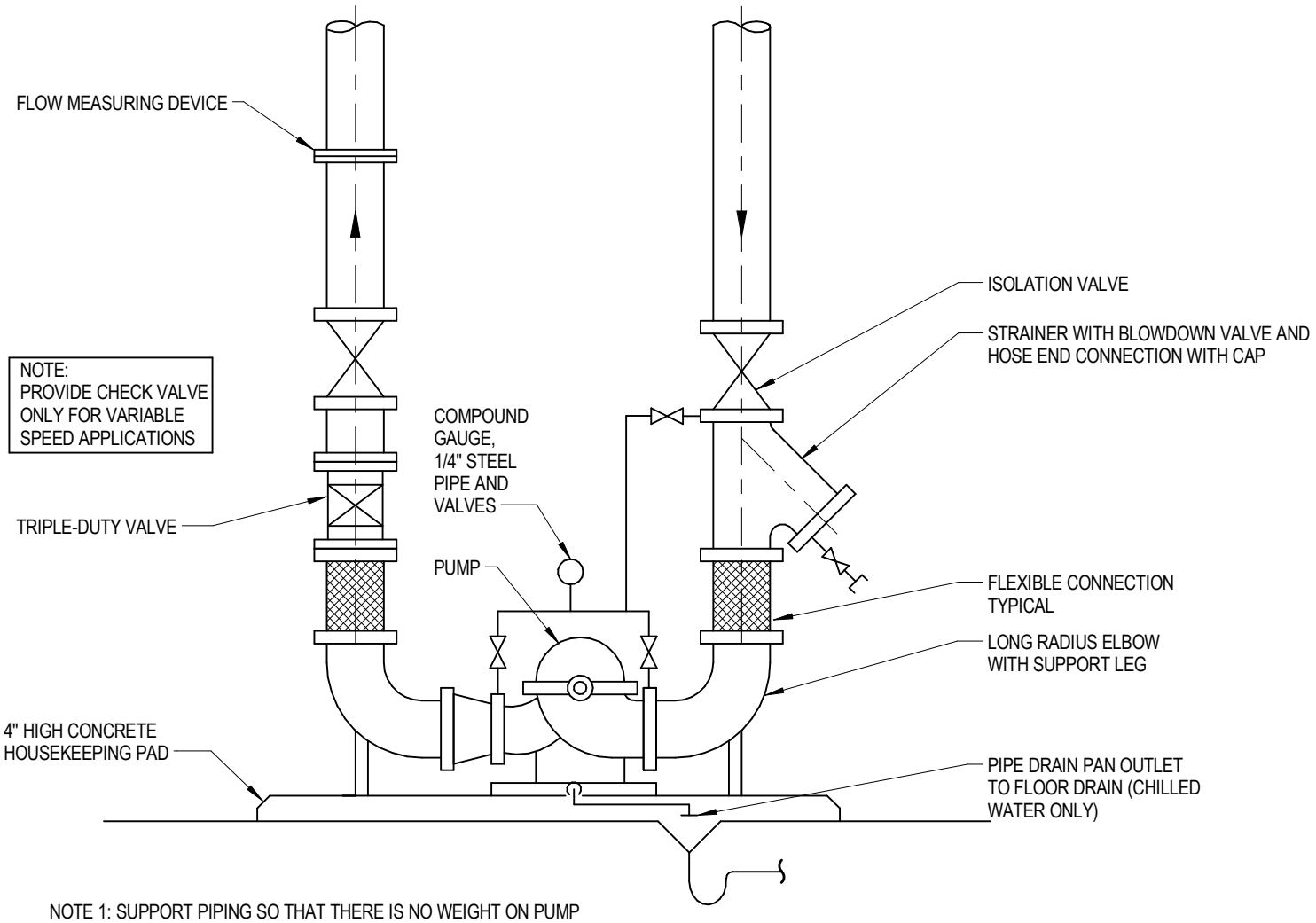

NOTE 1: SUPPORT PIPING SO THAT THERE IS NO WEIGHT ON PUMP

DOUBLE SUCTION PUMP PIPING DIAGRAM

NO SCALE

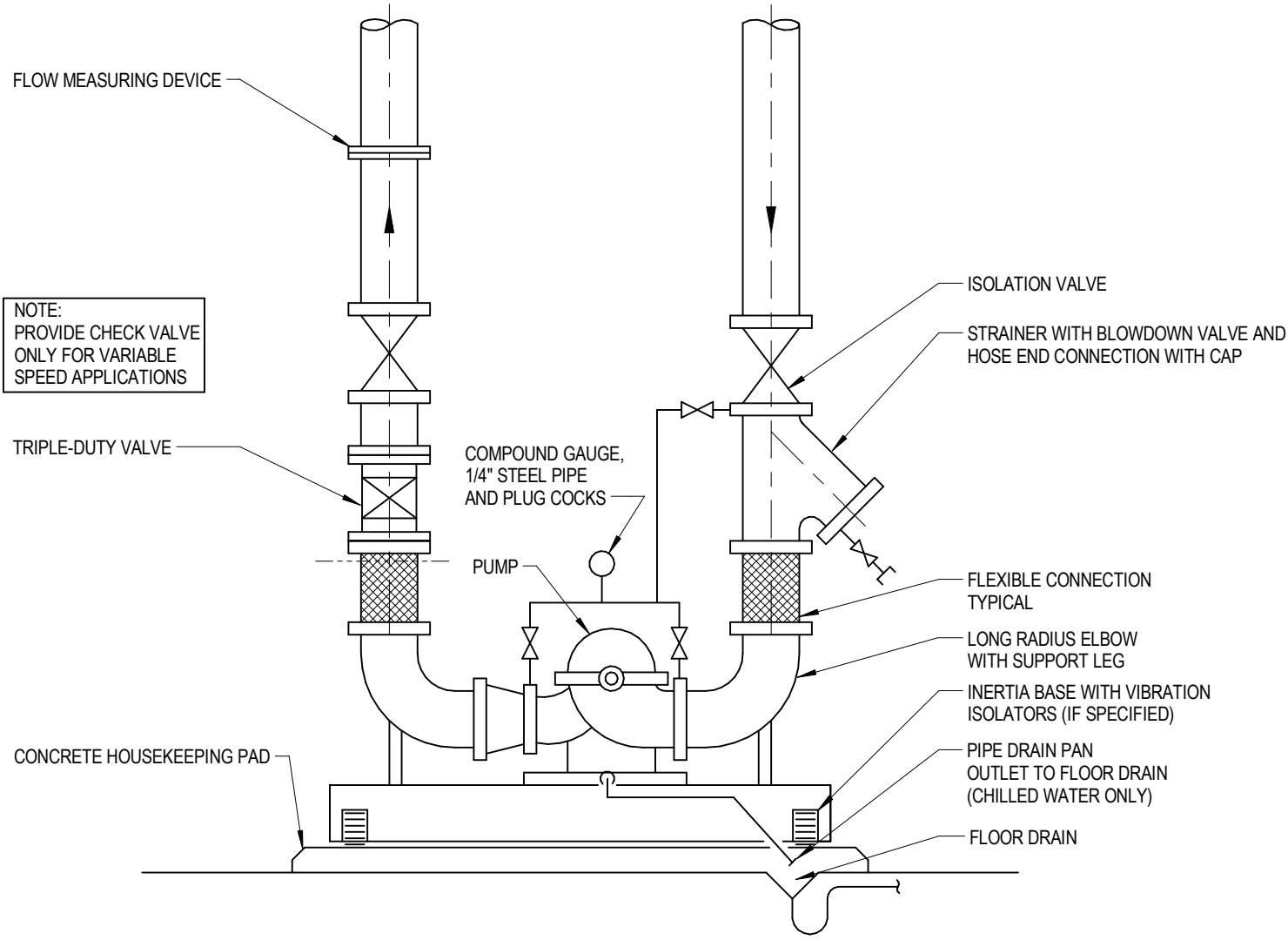

NOTE 1: SUPPORT PIPING SO THAT THERE IS NO WEIGHT ON PUMP

HORIZONTAL SPLIT-CASE PUMP (ISOLATED) PIPING DIAGRAM

NO SCALE

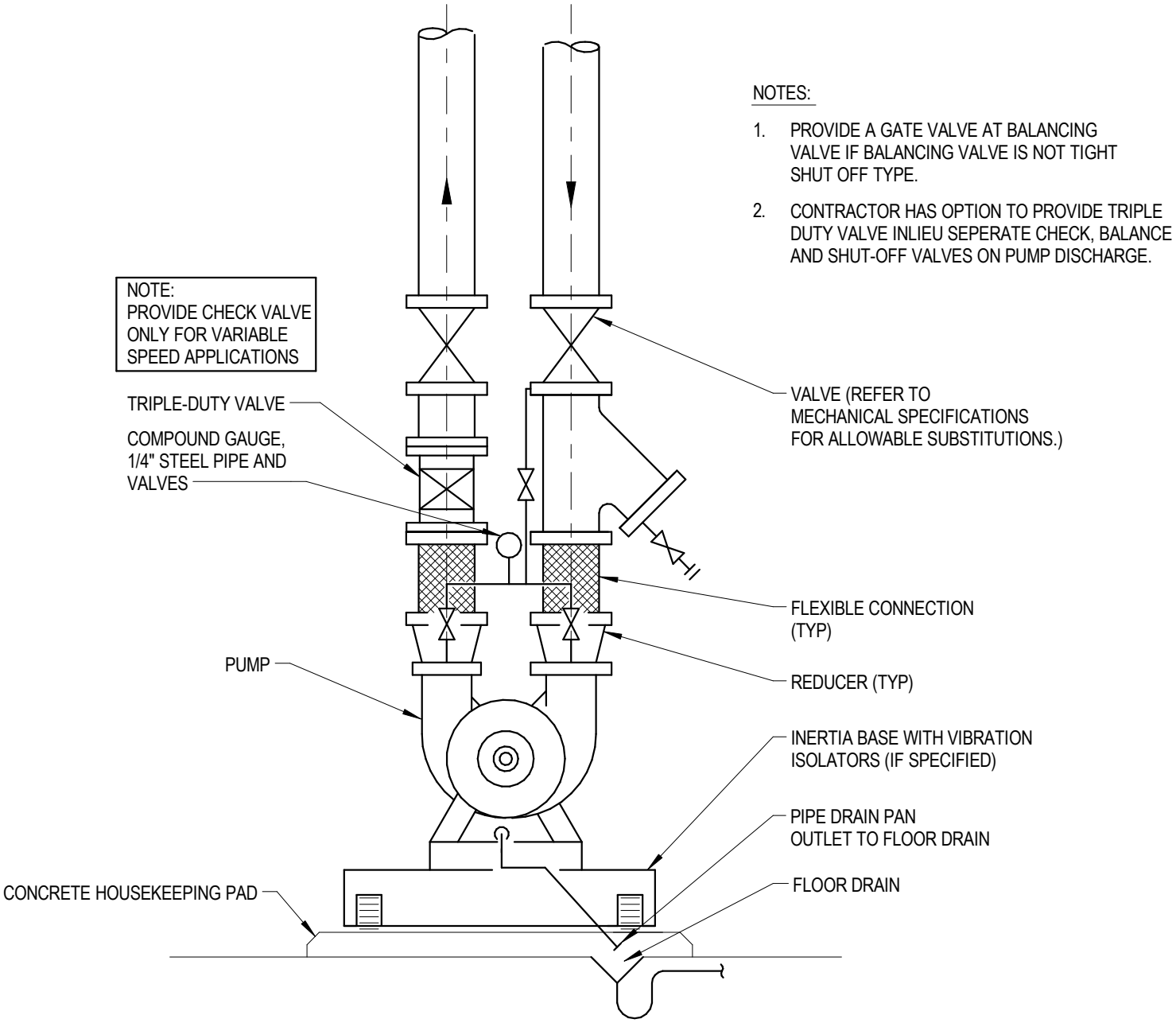

VERTICAL DOUBLE SUCTION PUMP PIPING DIAGRAM

NO SCALE

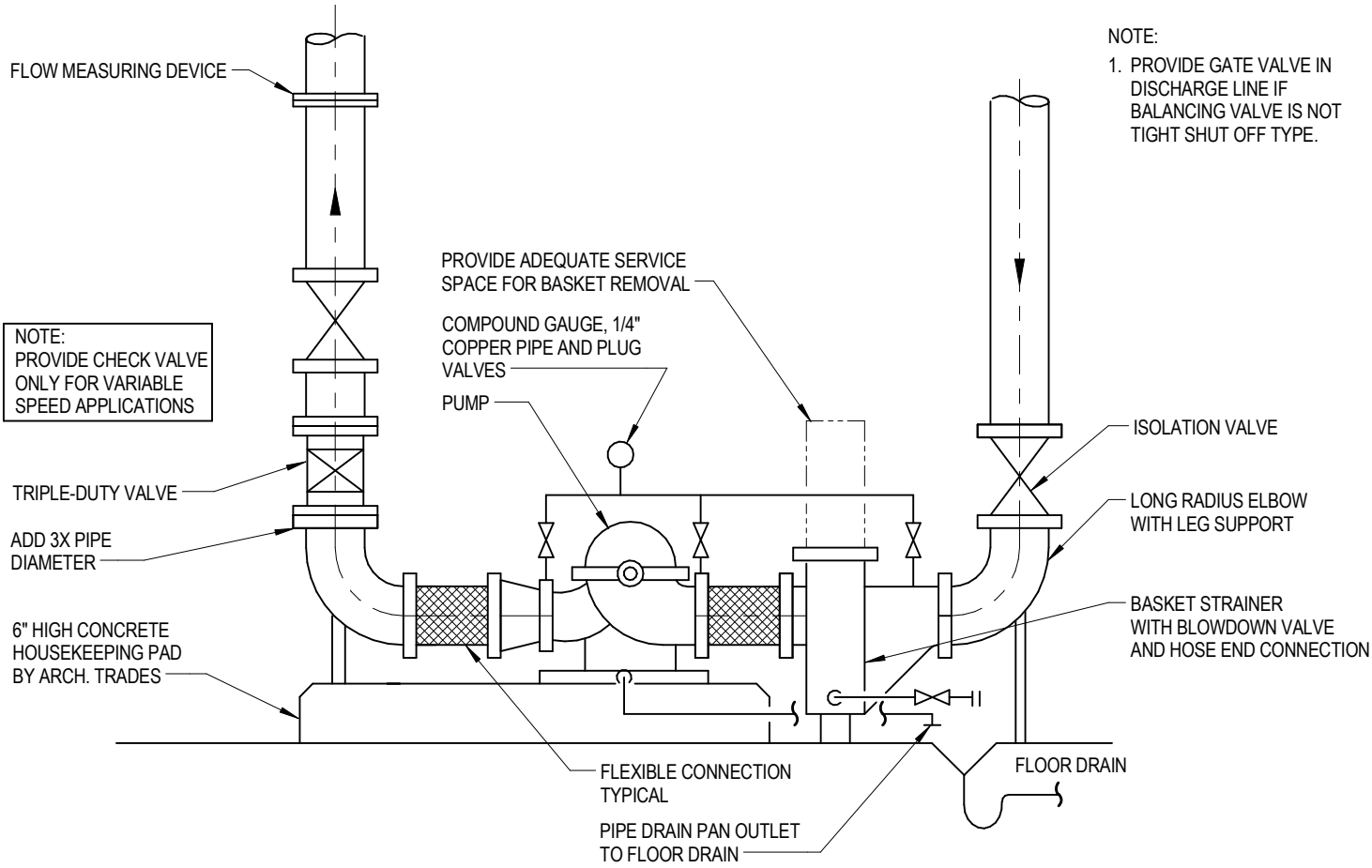

CONDENSER WATER PUMP PIPING DIAGRAM

NO SCALE

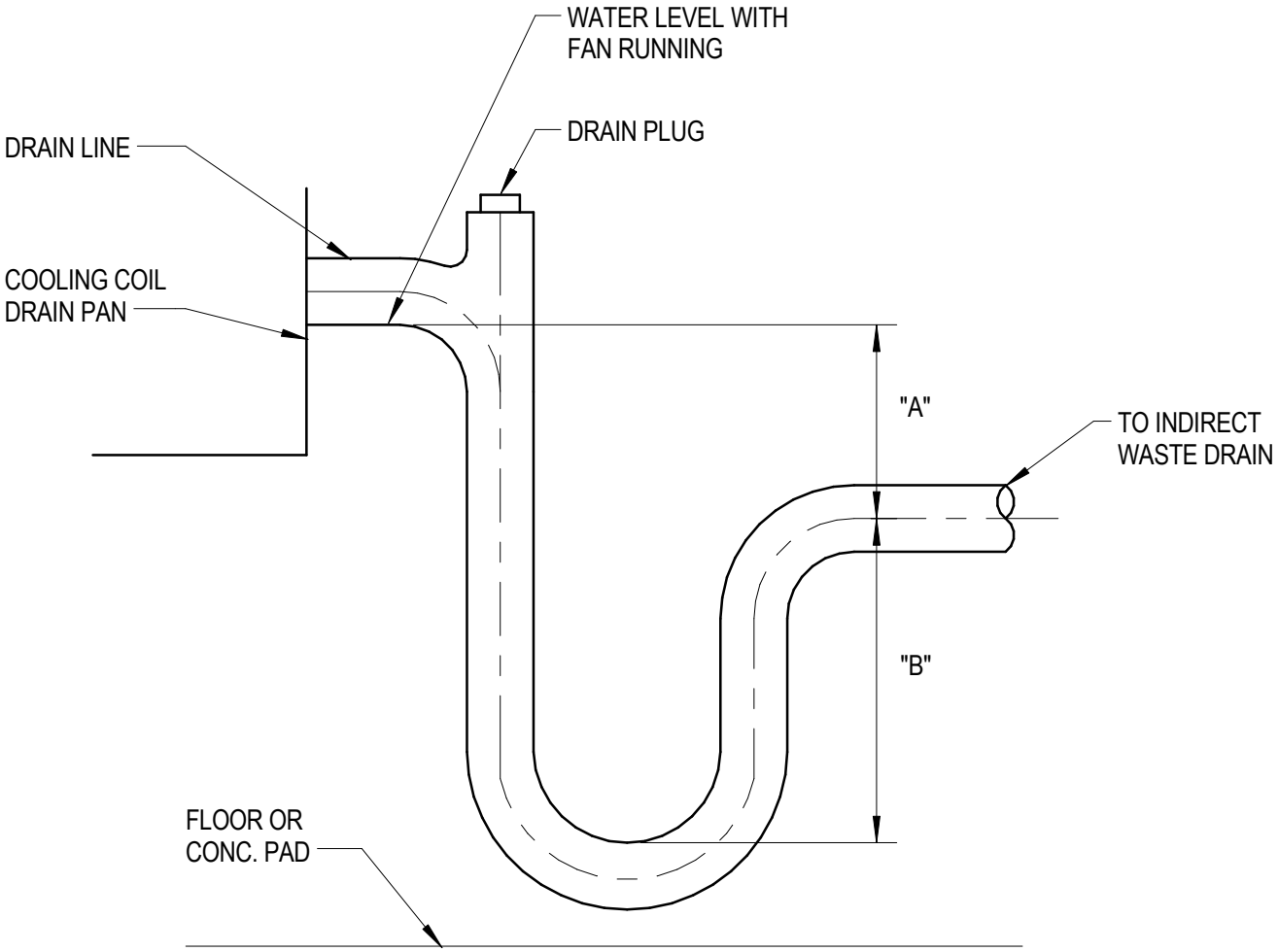

NOTES:

1. DRAW THRU
   A= SUCTION PRESSURE DOWNSTREAM OF COOLING COIL.
   B= 1/2 A PLUS 1 INCH.
2. BLOW THRU
   B= DISCHARGE PRESSURE DOWNSTREAM OF COOLING COIL PLUS 1 INCH.
   A= 4 INCH MINIMUM.

CONDENSATE DRAIN SIZE SCHEDULE	
COOLING COIL CAPACITY (TONS)	COND DRAIN PIPE SIZE
0 - 20	3/4"
20 - 40	1"
40 - 90	1 1/4"
90 - 125	1 1/2"
125 - 250	2"

COIL DRAIN PAN PIPING DETAIL

NO SCALE

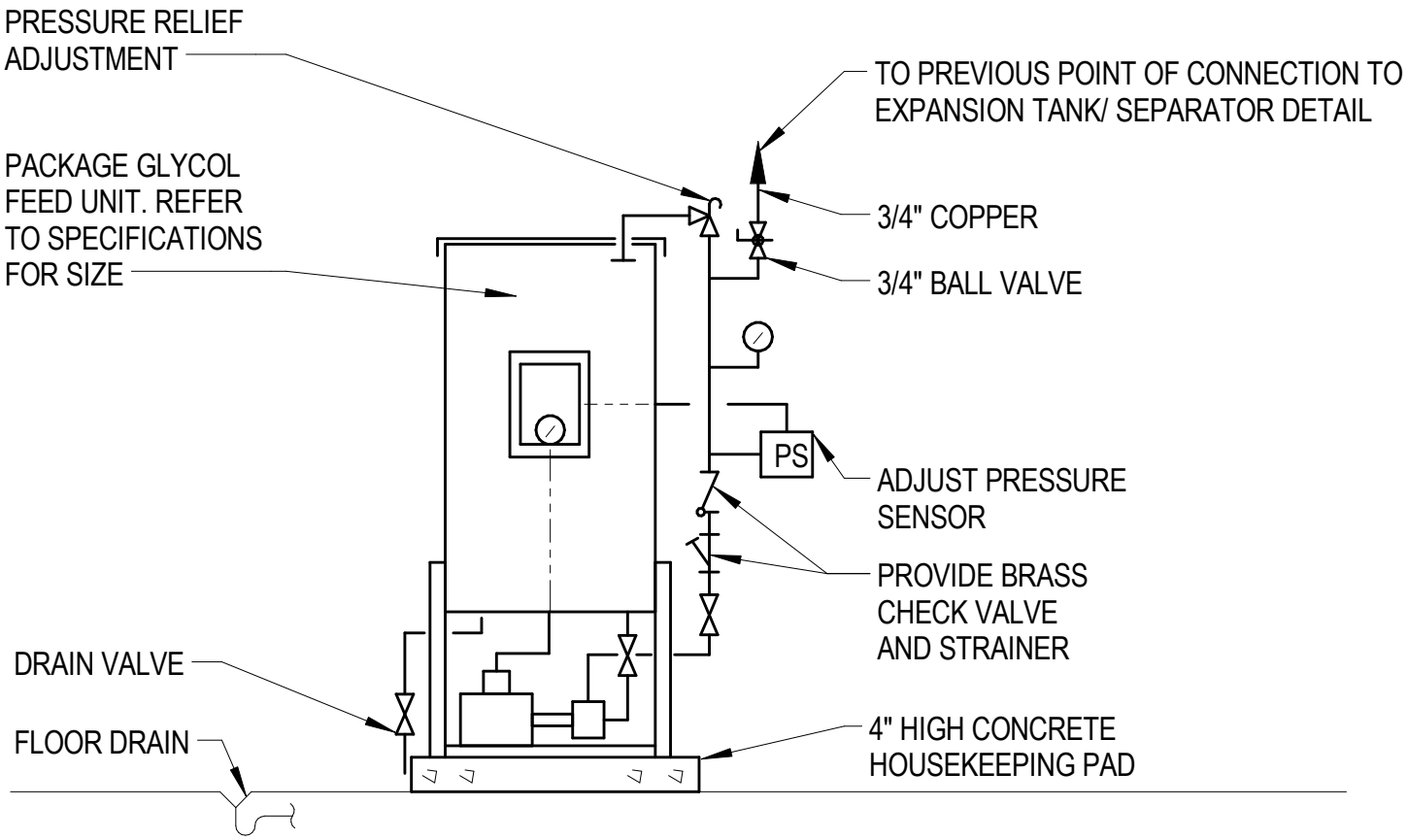

GLYCOL FEED UNIT PIPING DIAGRAM

NO SCALE

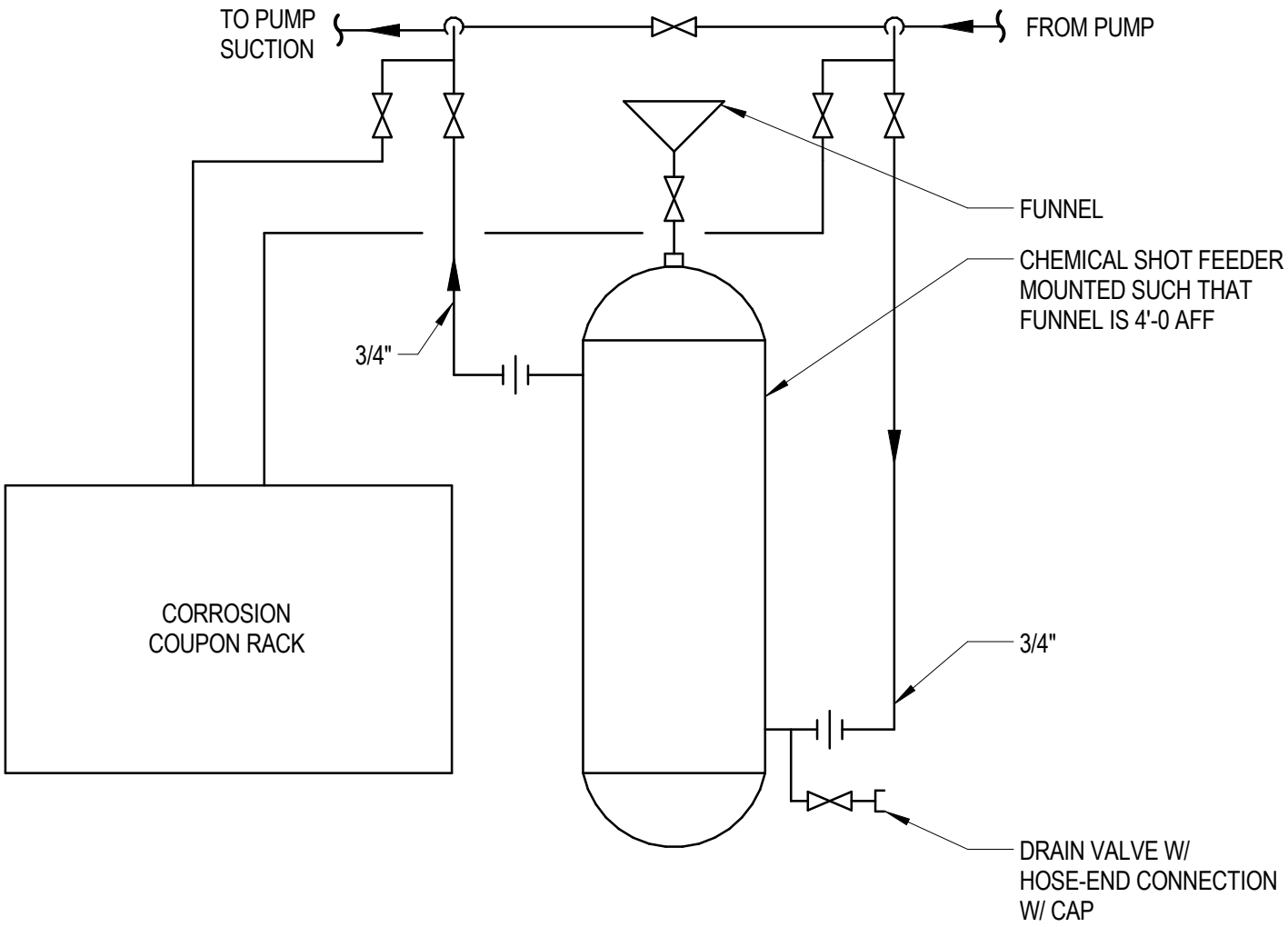

SHOT TYPE CHEMICAL FEEDER PIPING DIAGRAM

NO SCALE

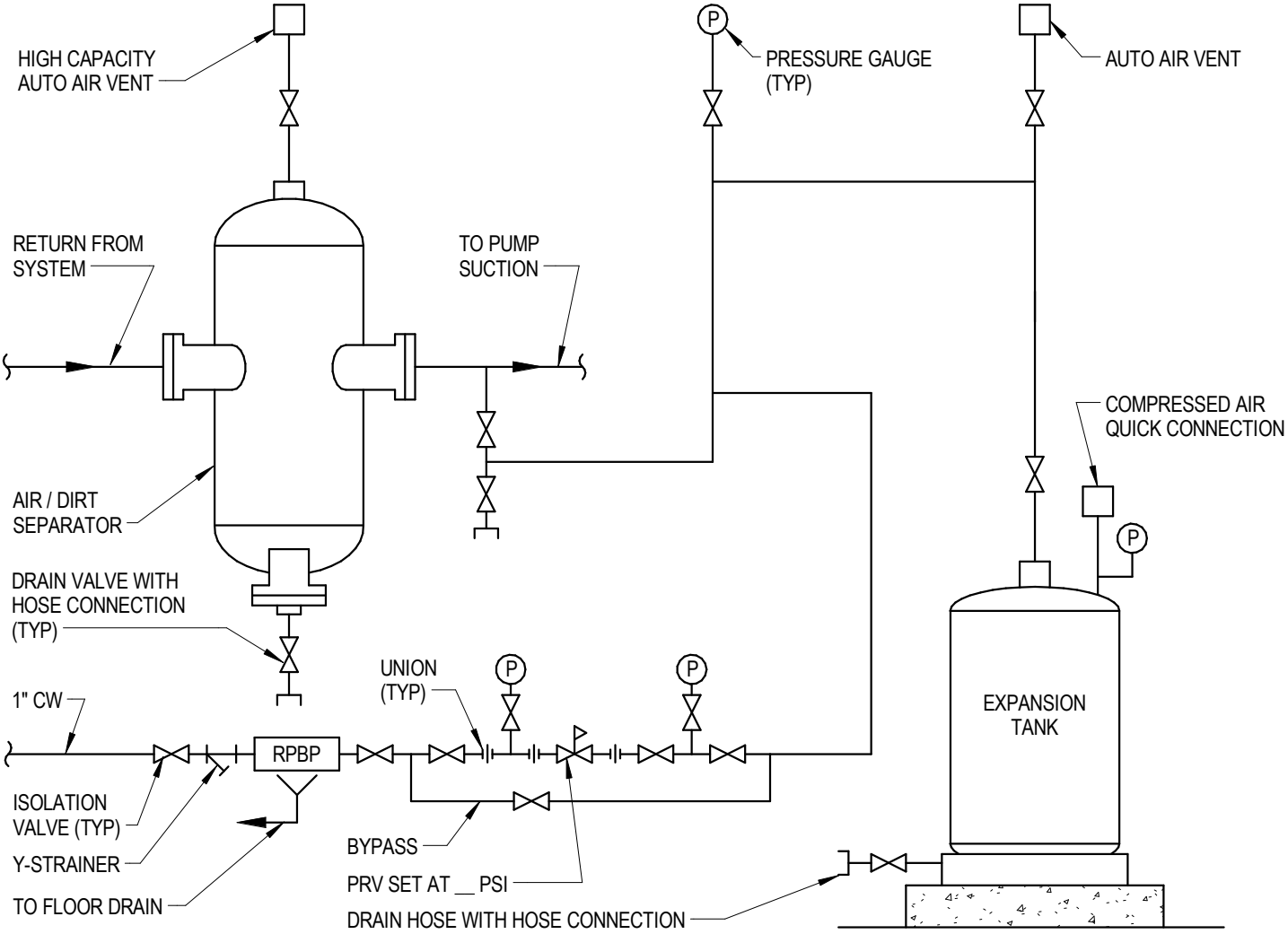

AIR / DIRT SEPARATOR AND FLOOR MOUNTED EXPANSION TANK

NO SCALE

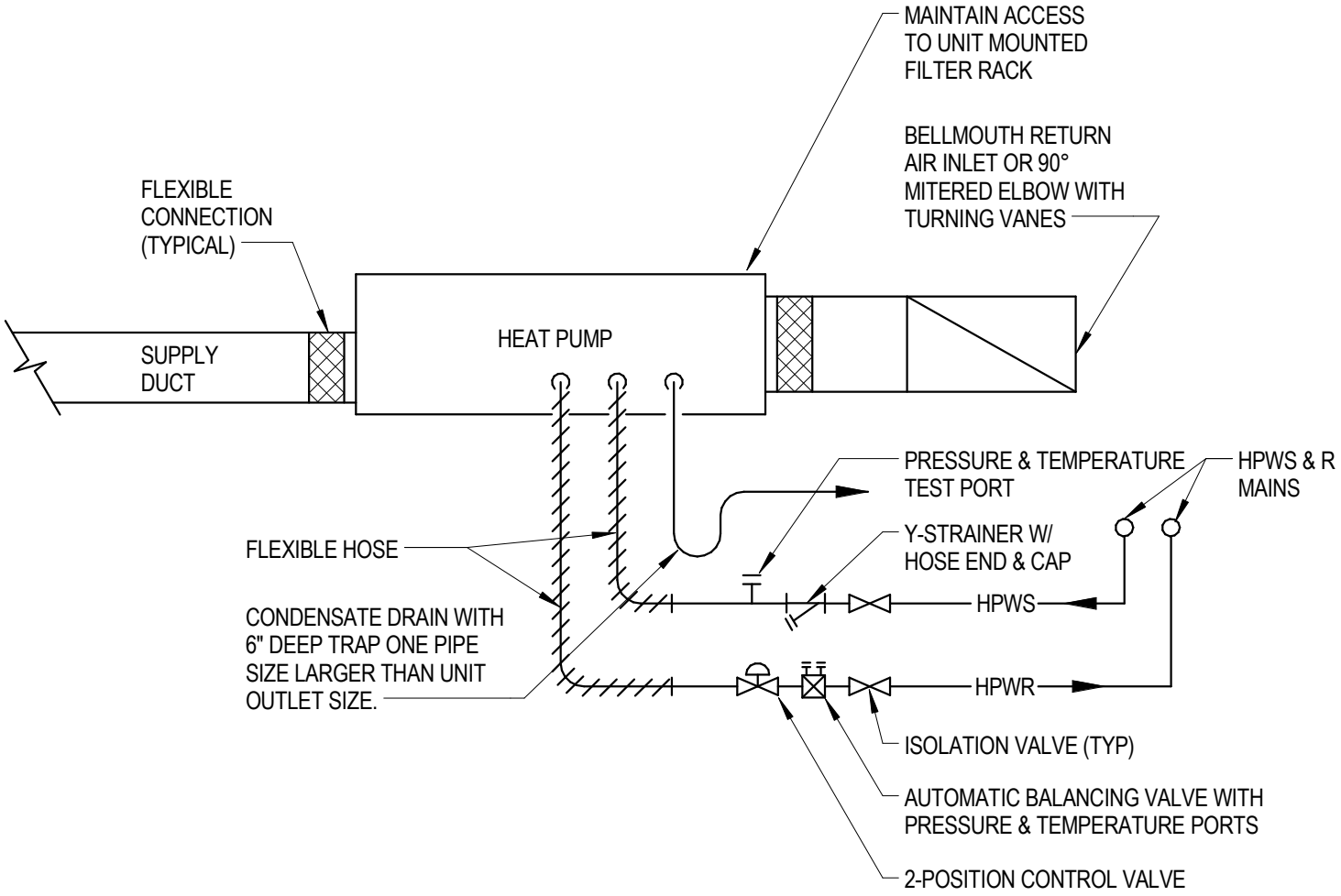

HORIZONTAL WATER SOURCE HEAT PUMP PIPING DIAGRAM

NO SCALE

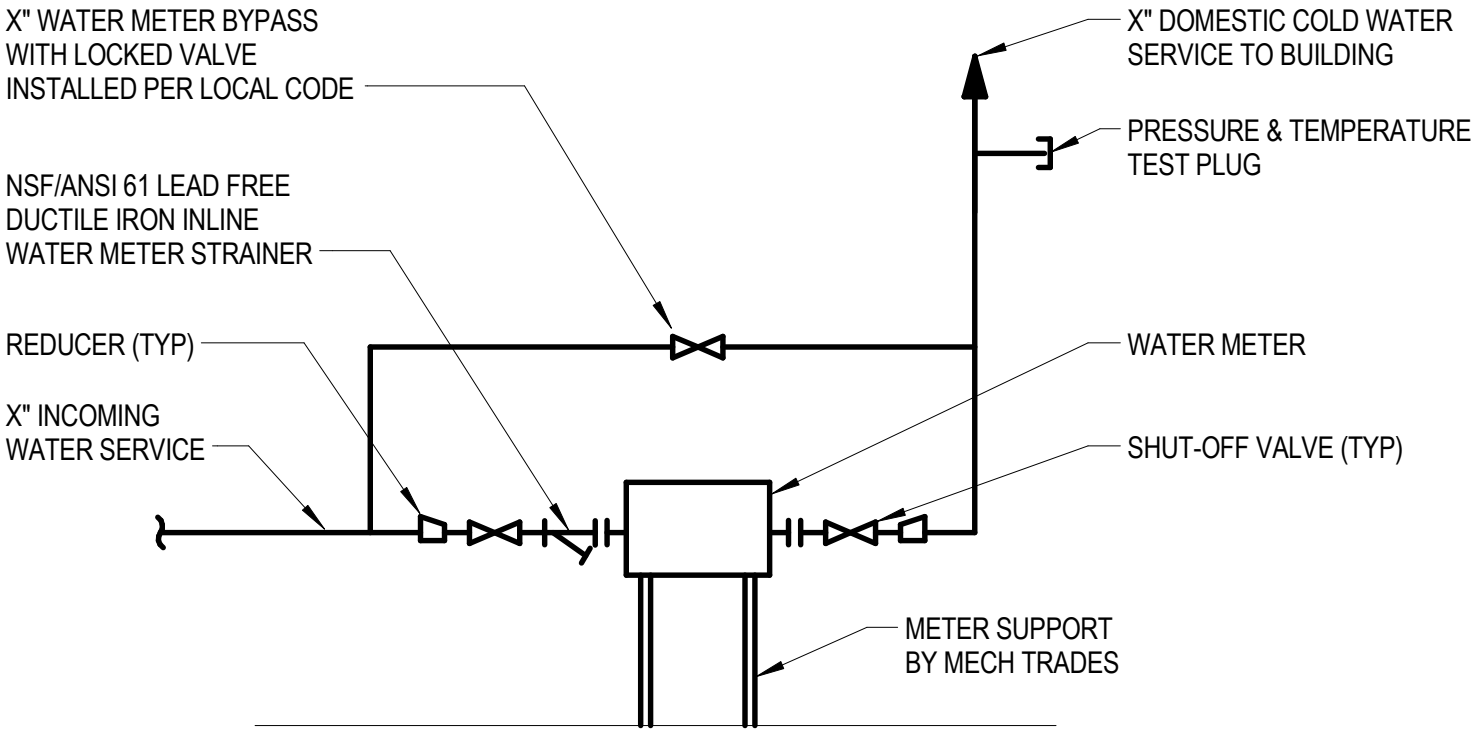

WATER METER DETAIL

NO SCALE

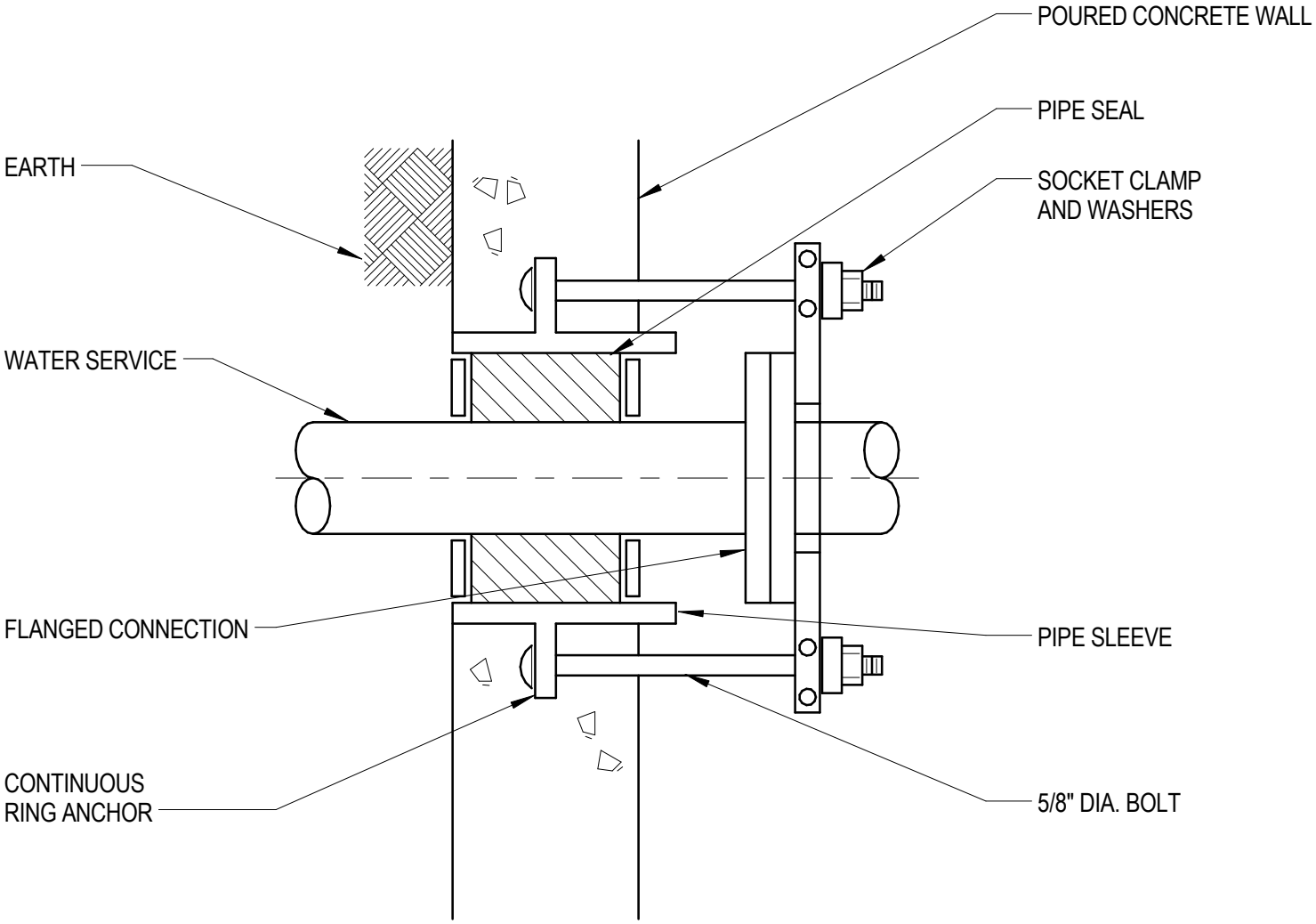

WATER SERVICE ENTRANCE DETAIL

NO SCALE

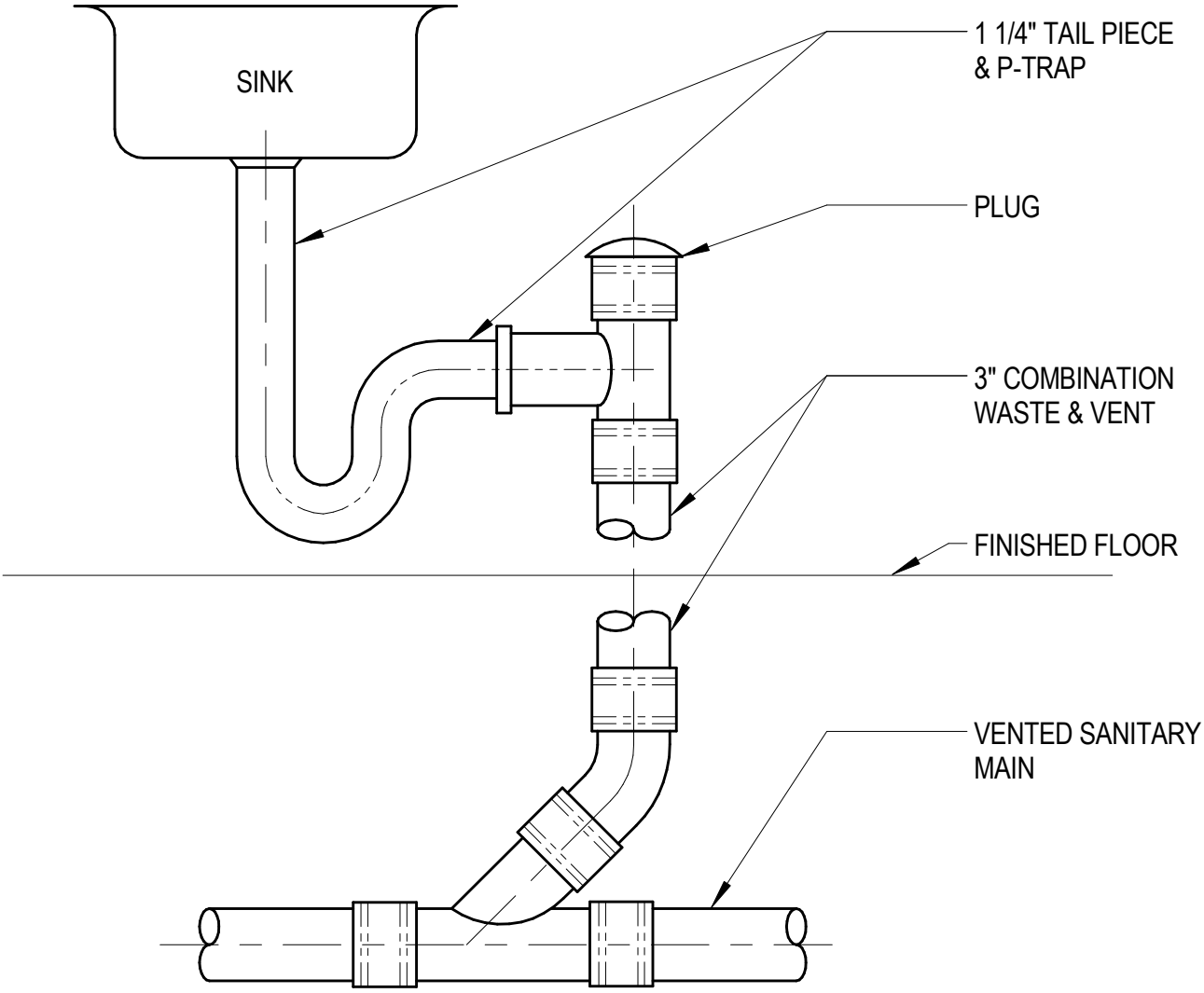

ISLAND SINK WASTE & VENT DETAIL

NO SCALE

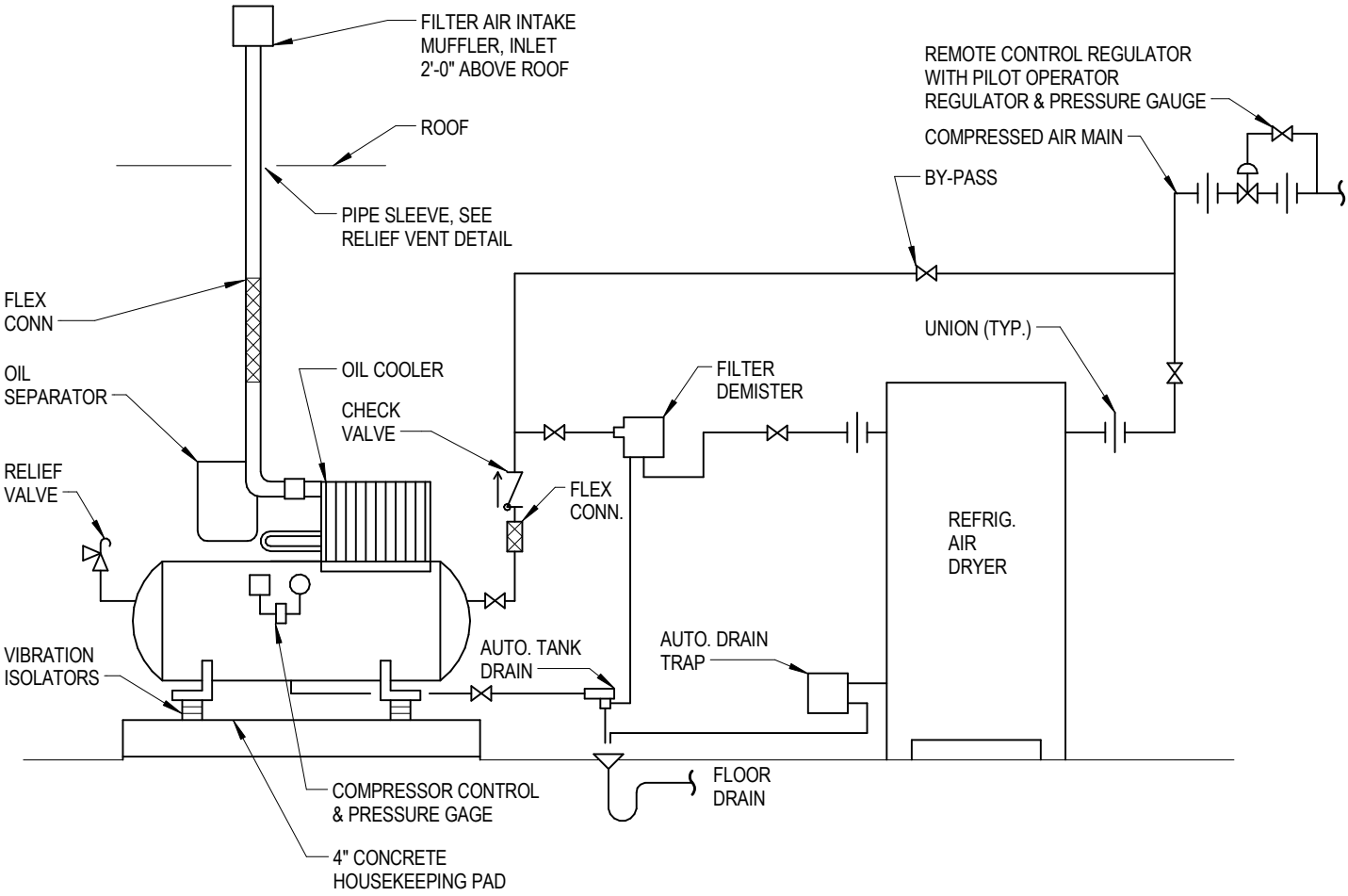

LABORATORY AIR COMPRESSOR PIPING DETAIL

NO SCALE

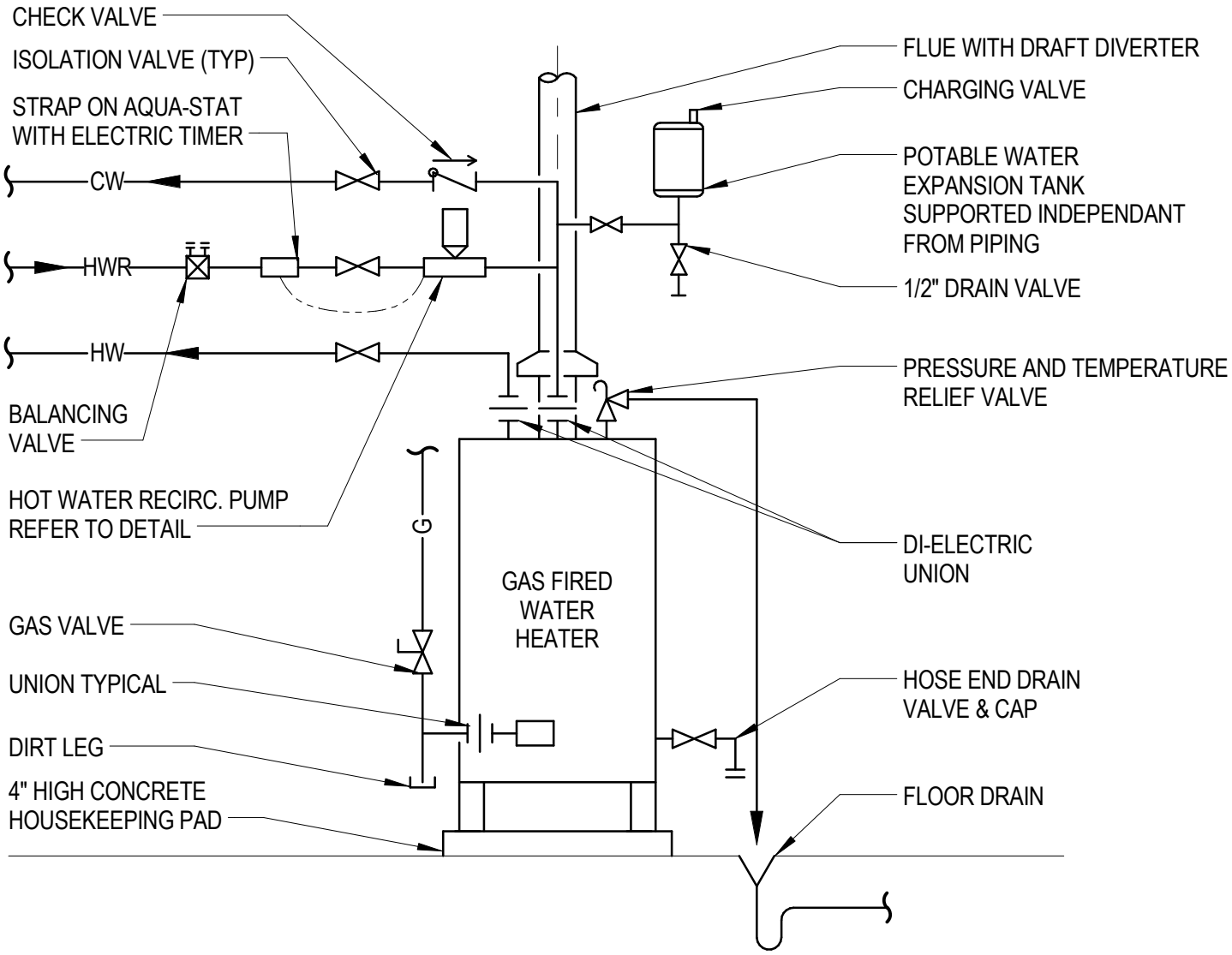

GAS FIRED WATER HEATER PIPING DIAGRAM

NO SCALE

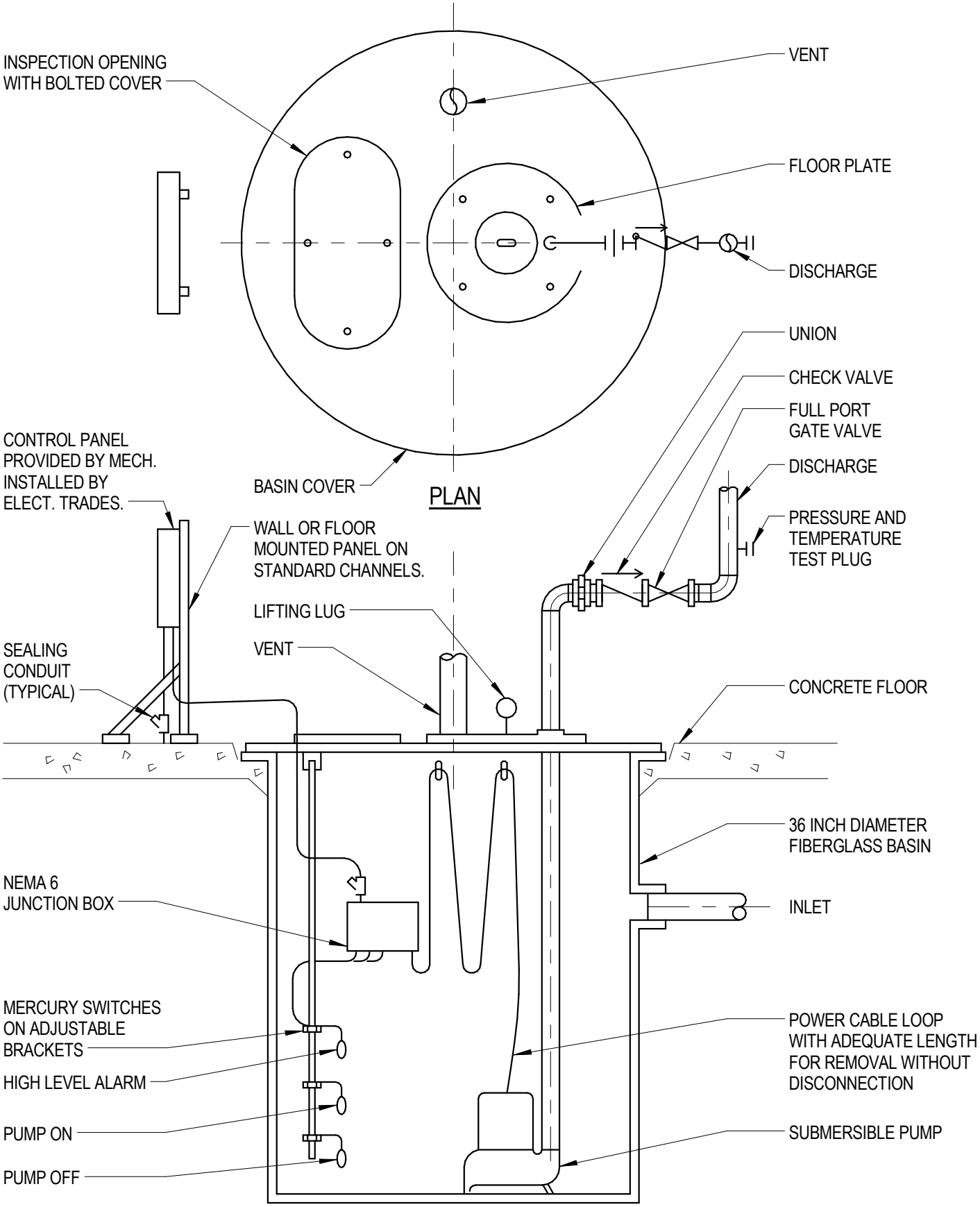

SECTION

SIMPLEX SUBMERSIBLE SUMP PUMP DETAIL

NO SCALE

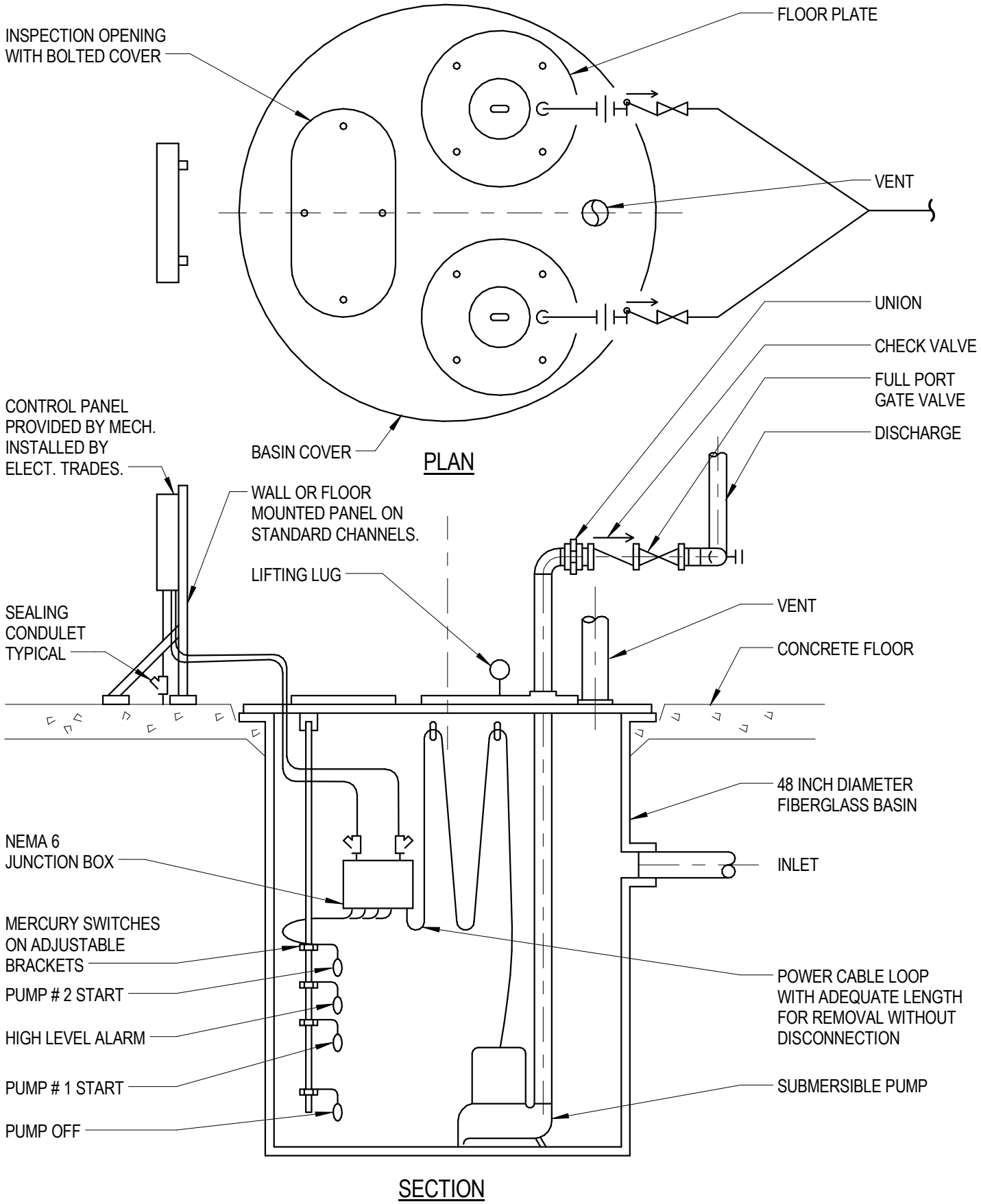

DUPLEX SUBMERSIBLE SUMP PUMP DETAIL

NO SCALE

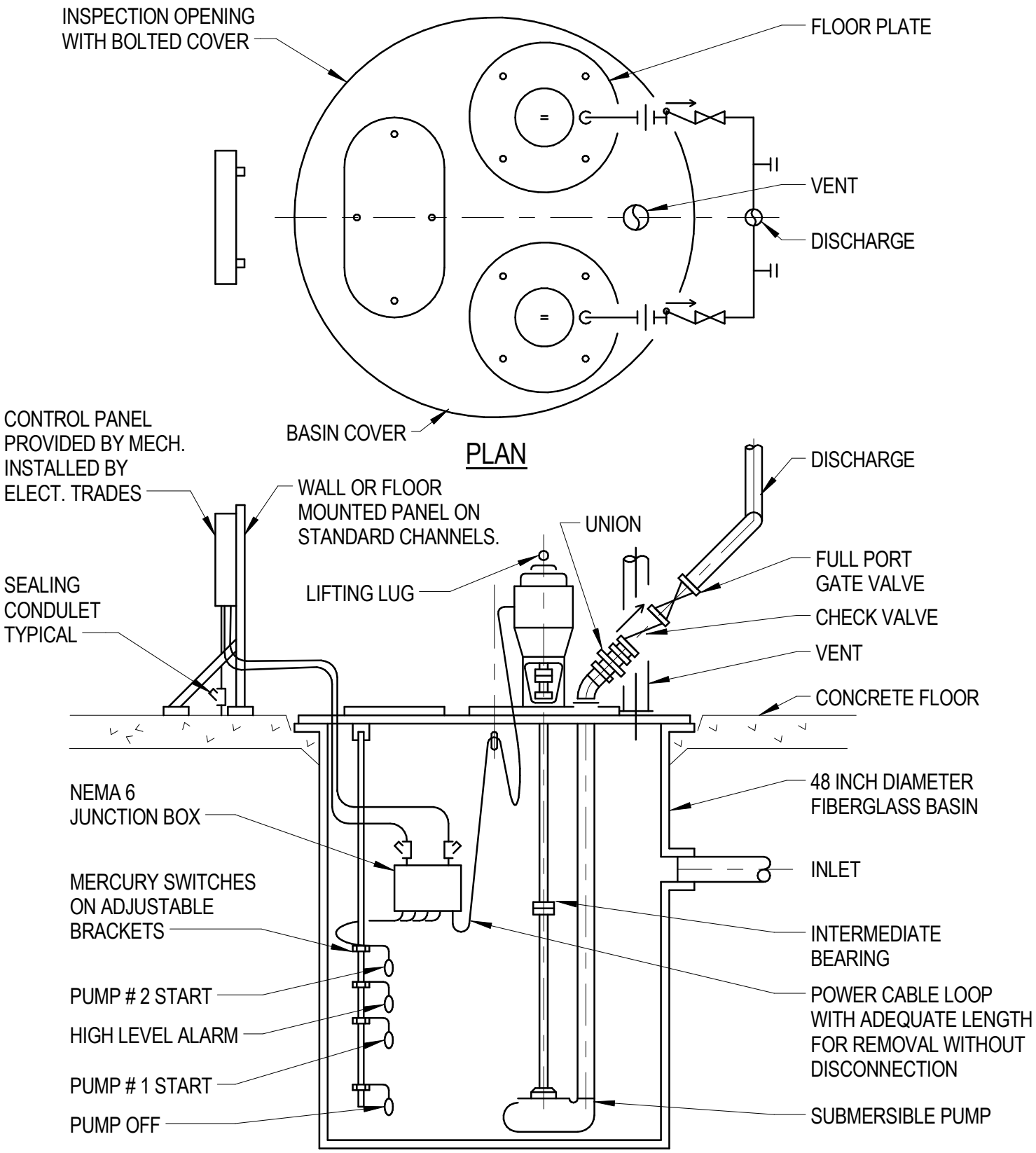

DUPLEX SUMP PUMP DETAIL

NO SCALE

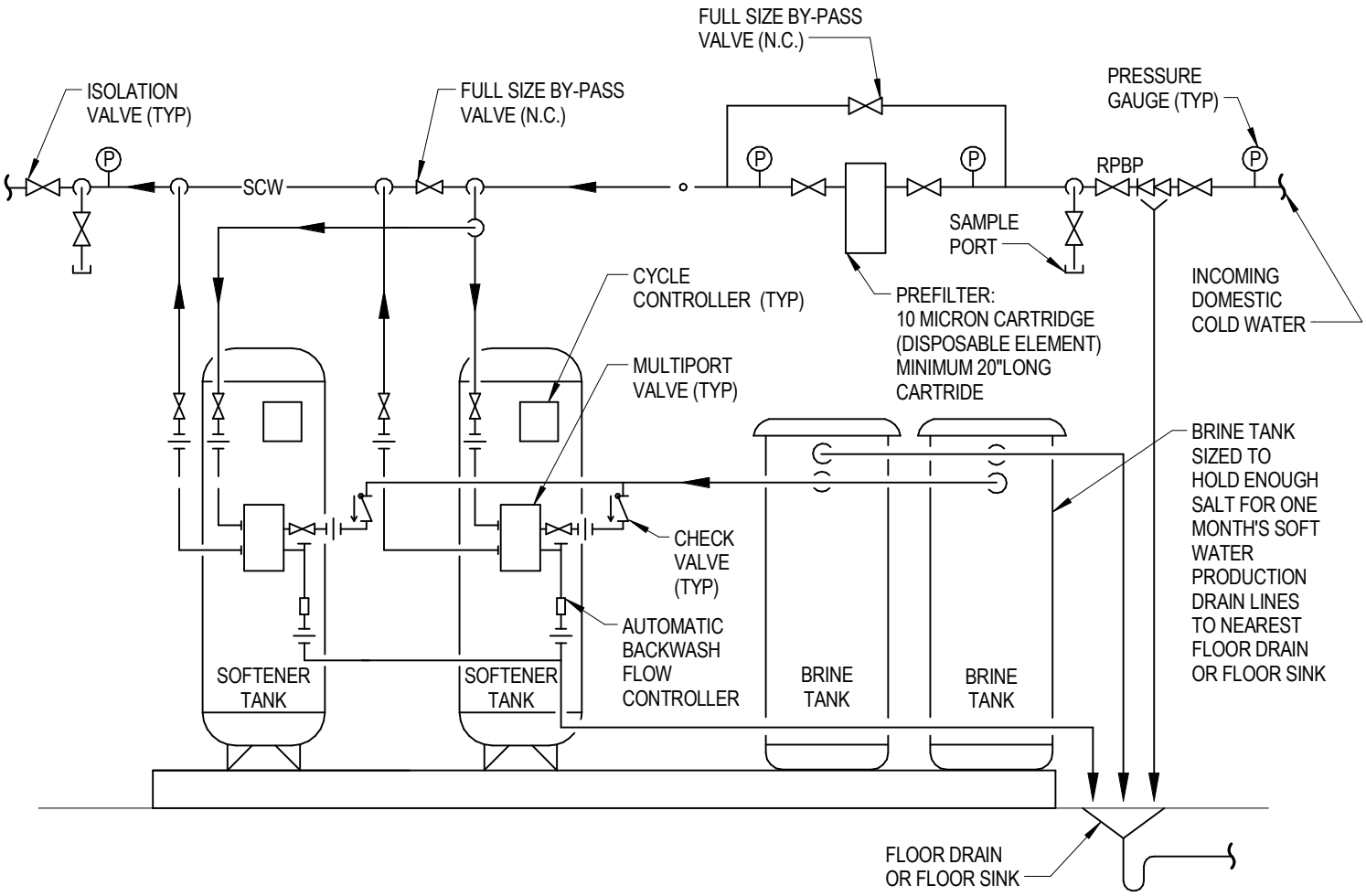

DUPLEX WATER SOFTENER PIPING DIAGRAM

NO SCALE

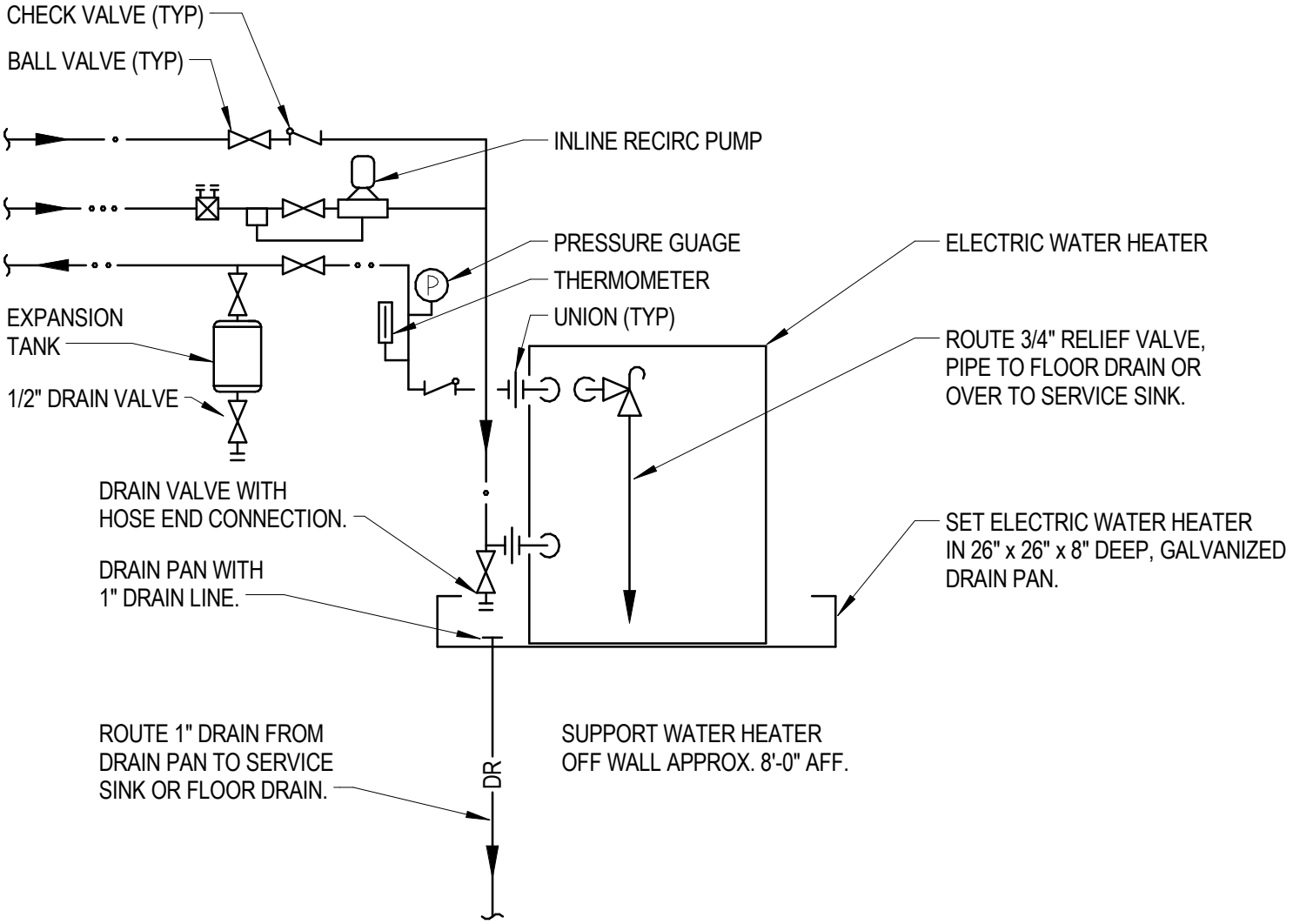

SHELF MOUNTED ELECTRIC WATER HEATER PIPING DIAGRAM

NO SCALE

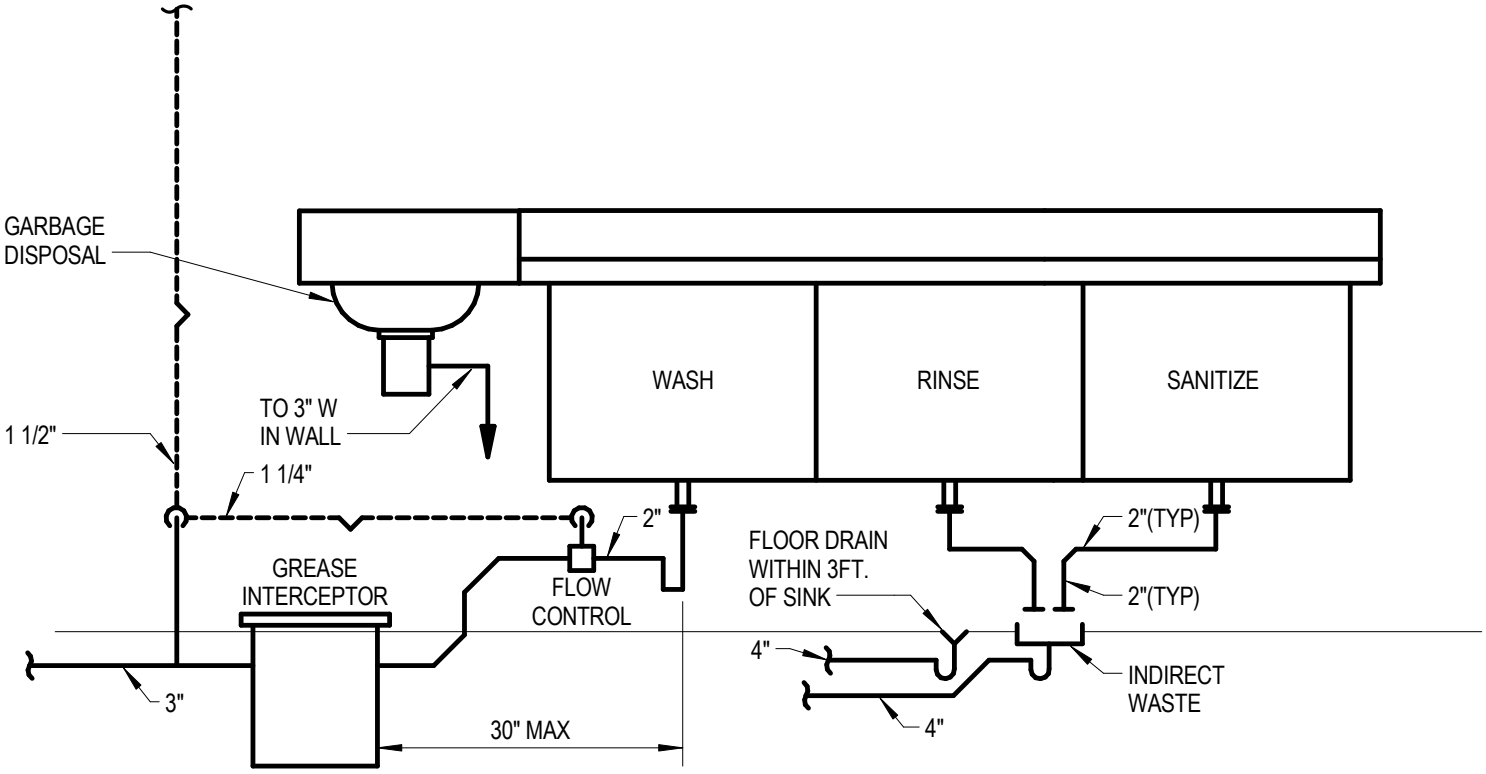

THREE COMPARTMENT SINK WITH GREASE INTERCEPTOR

NO SCALE

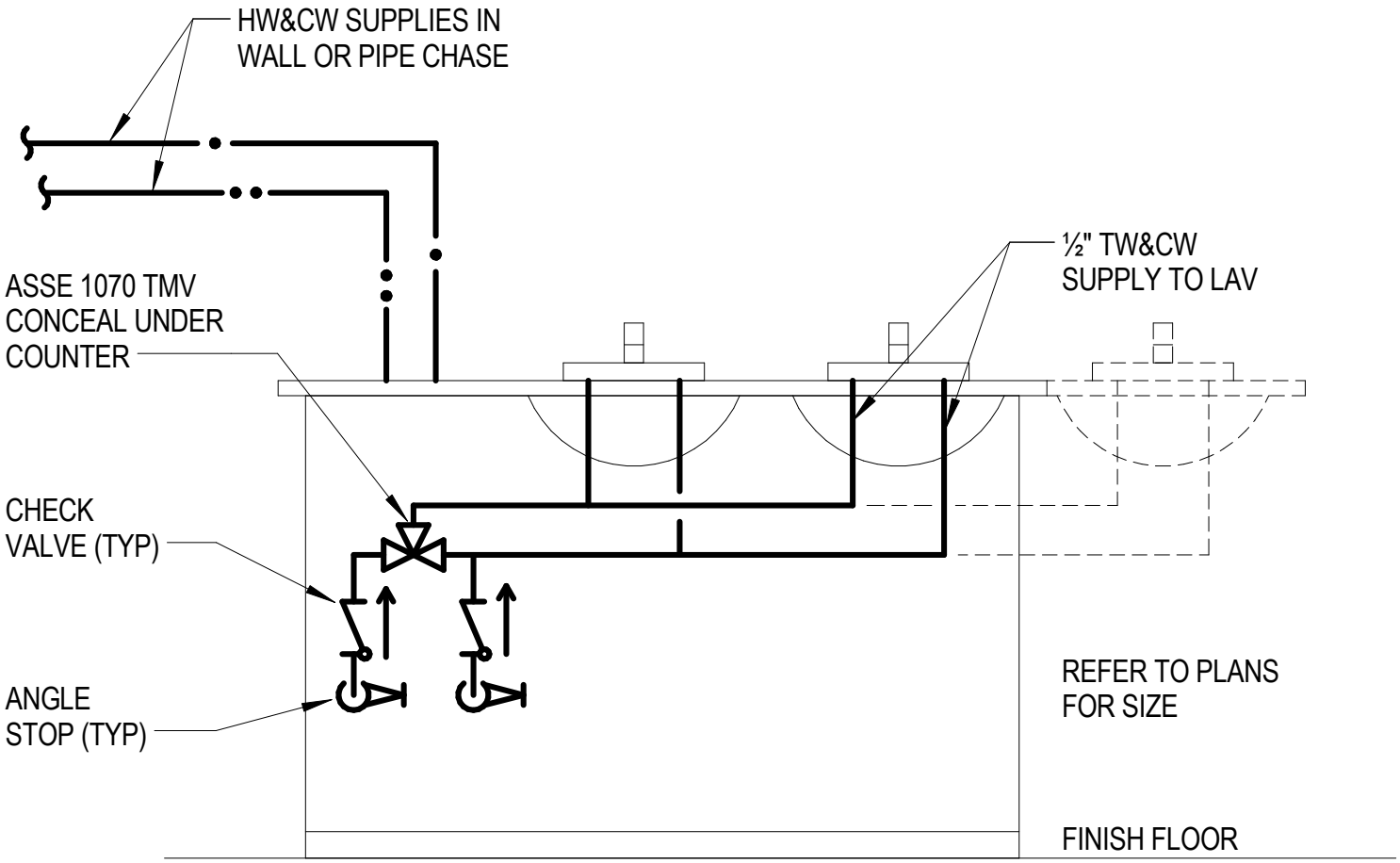

TYPICAL FAUCET VALVING INSTALLATION DIAGRAM

NO SCALE

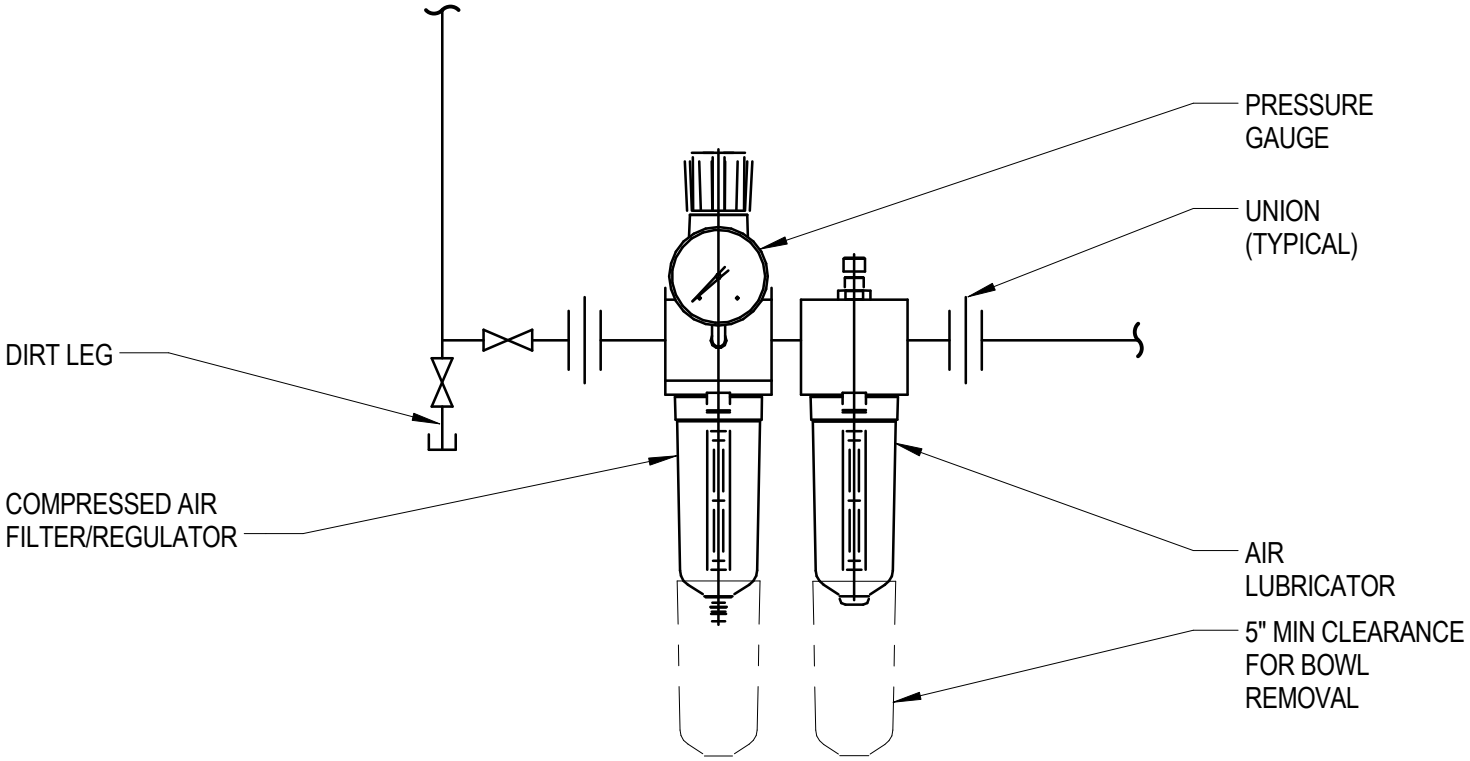

COMPRESSED AIR FILTER/LUBRICATOR DETAIL

NO SCALE

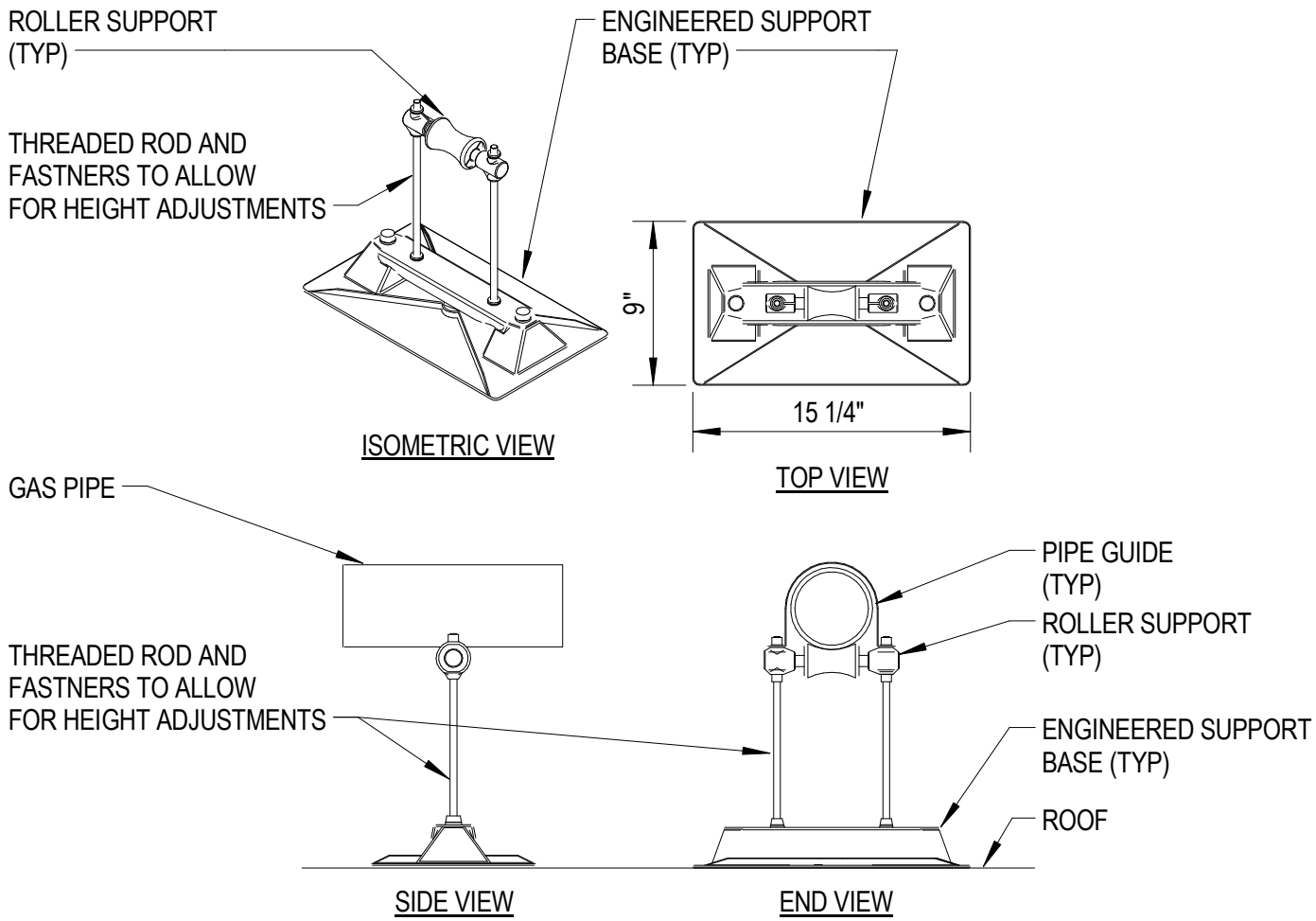

ROOF MOUNTED GAS PIPE SUPPORT DETAIL

NO SCALE

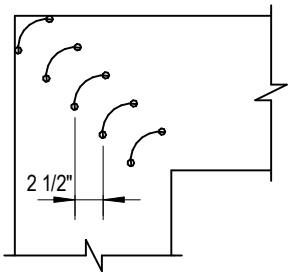

SINGLE VANE ELBOW
UP TO 20" IN WIDTH

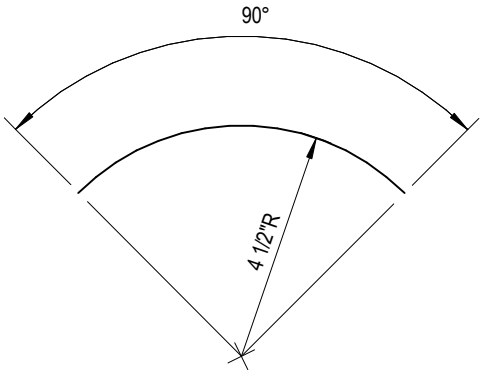

SINGLE VANE DETAIL

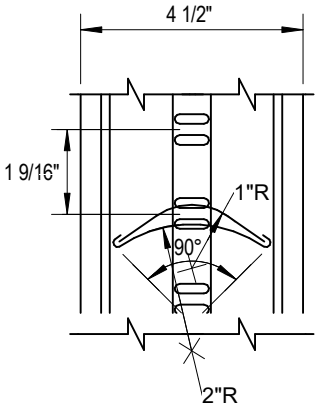

SMALL DOUBLE VANE
RUNNER DETAIL

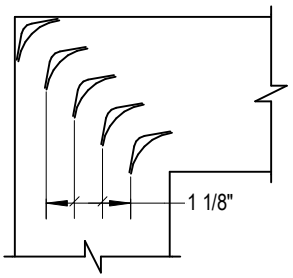

SMALL DOUBLE VANE SQUARE
ELBOW UP TO 36" IN WIDTH

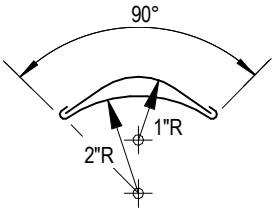

SMALL DOUBLE VANE DETAIL

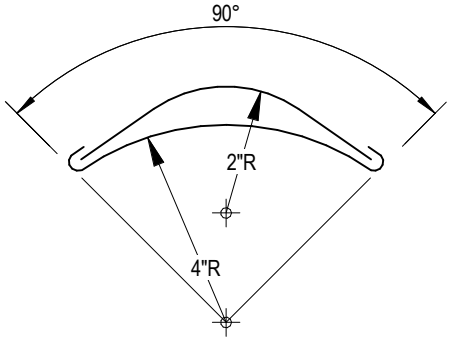

LARGE DOUBLE VANE DETAIL

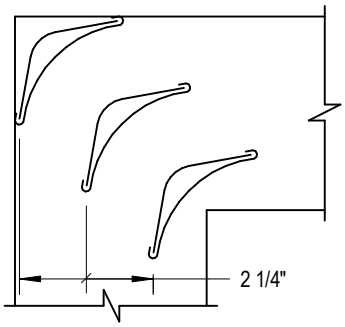

LARGE DOUBLE VANE SQUARE ELBOW
MORE THAN 36" IN WIDTH

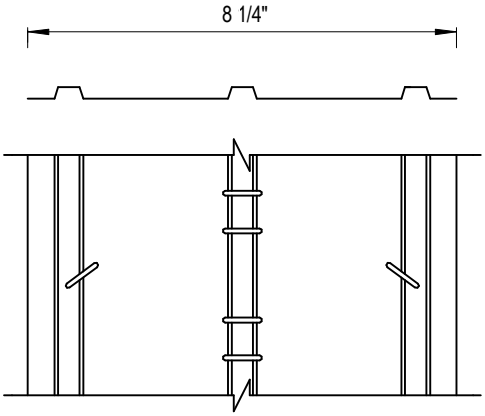

LARGE DOUBLE VANE RUNNER DETAIL

SQUARE AND RECTANGULAR ELBOWS - LOW VELOCITY

NO SCALE

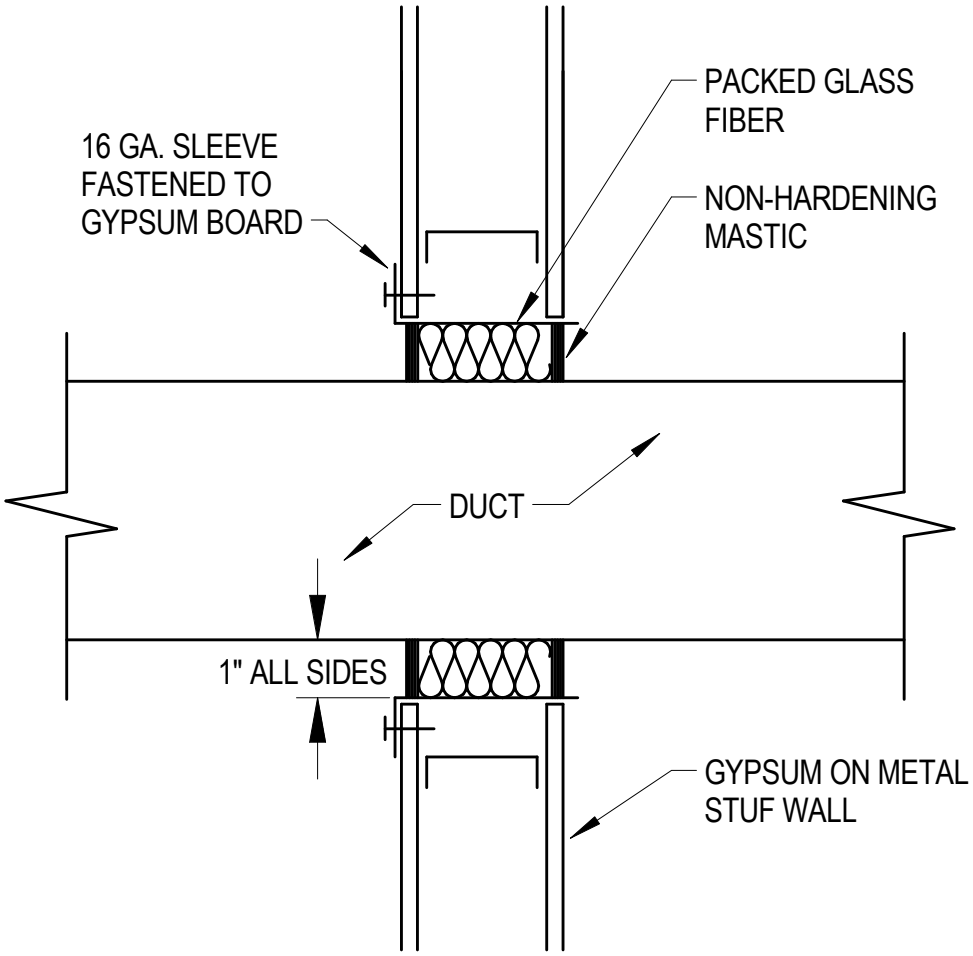

NOTE:
1. COORDINATE WITH ARCH TRADES FOR FRAME WALL OPENINGS LARGER THAN 14 INCHES WIDE OR WHERE METAL STUD MUST BE CUT TO INSTALL DUCT.

DUCT SEAL AT NON-RATED WALLS

NO SCALE

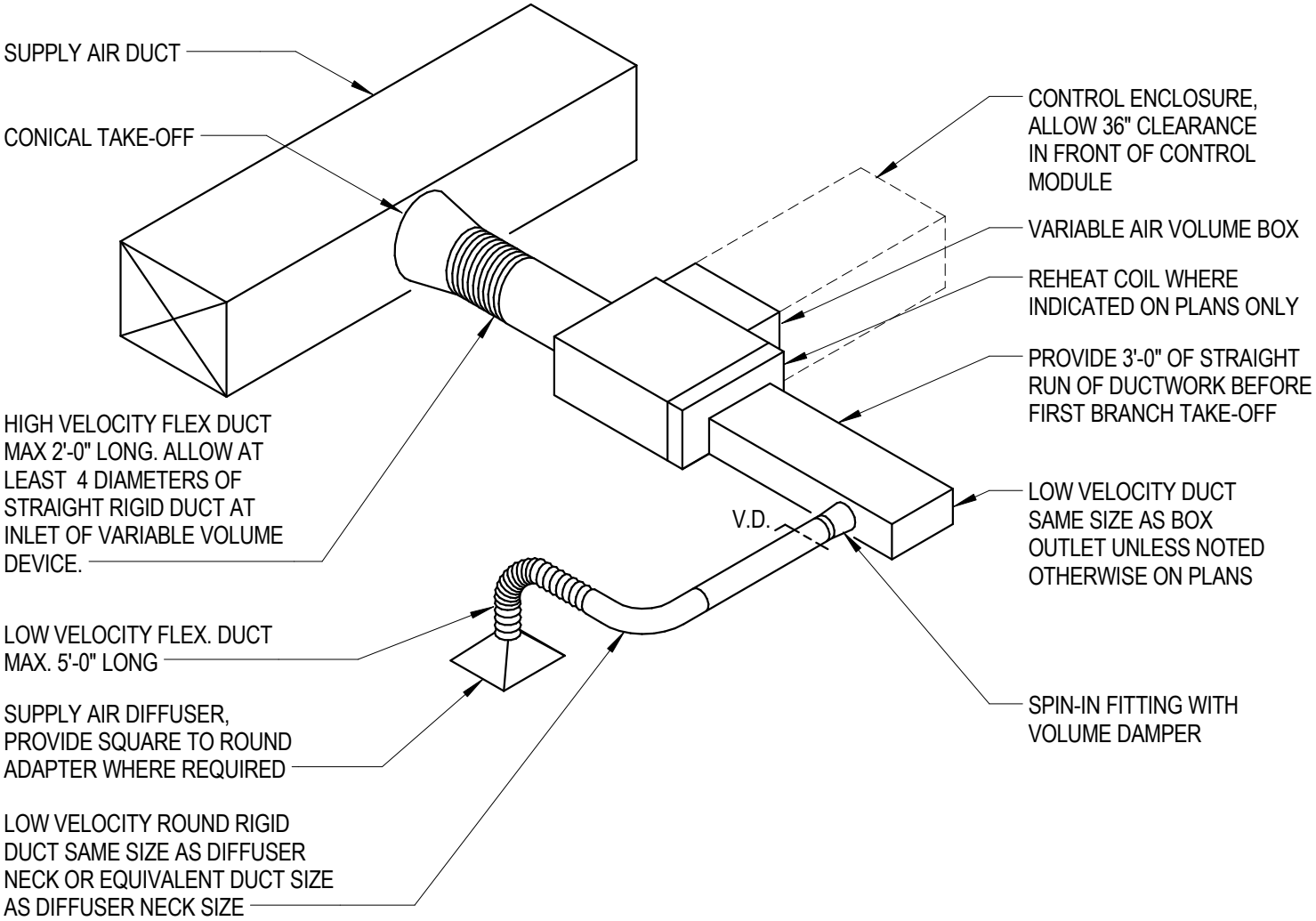

TYPICAL VAV BOX DETAIL

NO SCALE

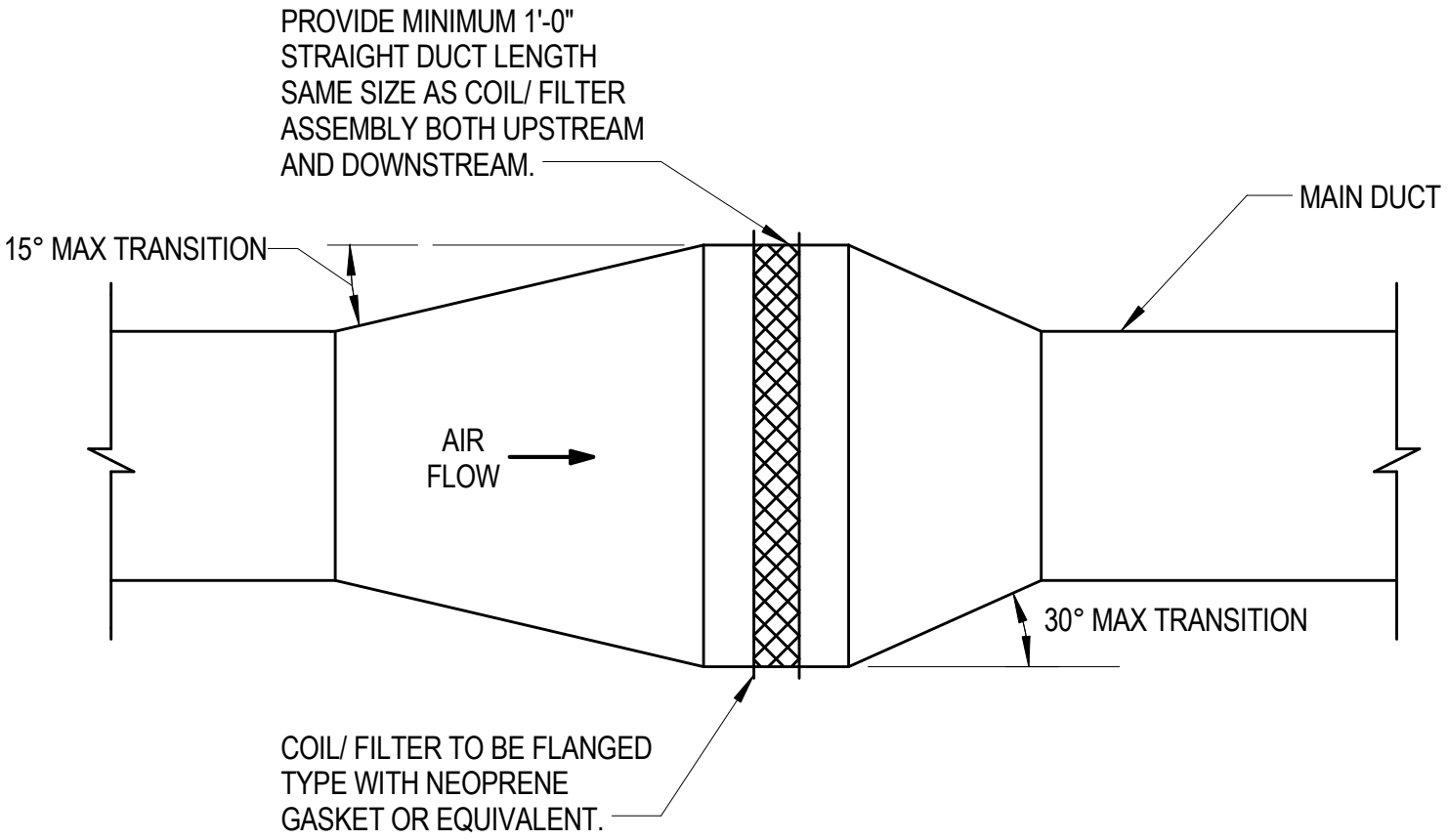

TYPICAL DUCT TRANSITION

NO SCALE

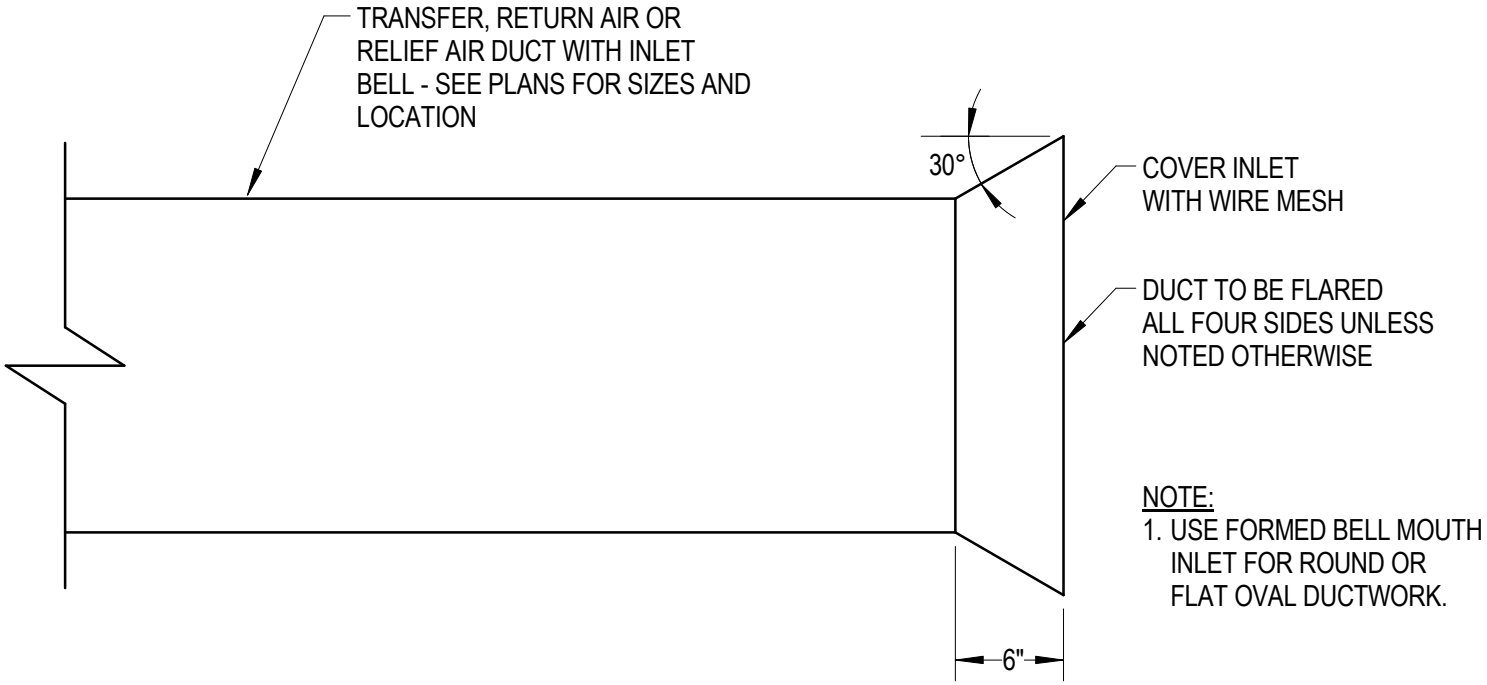

NOTE:
1. USE FORMED BELL MOUTH INLET FOR ROUND OR FLAT OVAL DUCTWORK.

SHEET METAL FORMED INLET DETAIL

NO SCALE

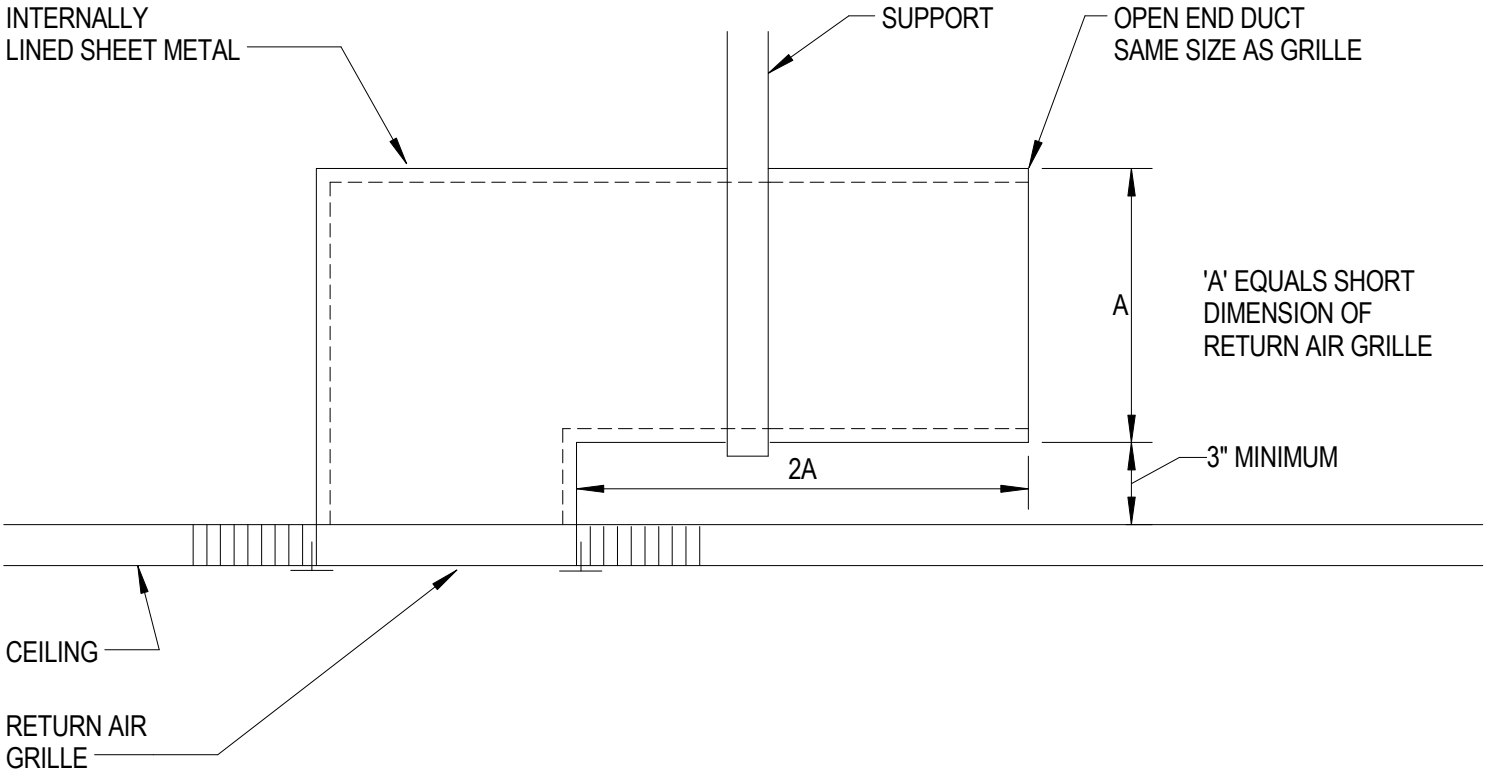

TYPICAL CEILING RETURN AIR GRILLE SOUND TRAP

NO SCALE

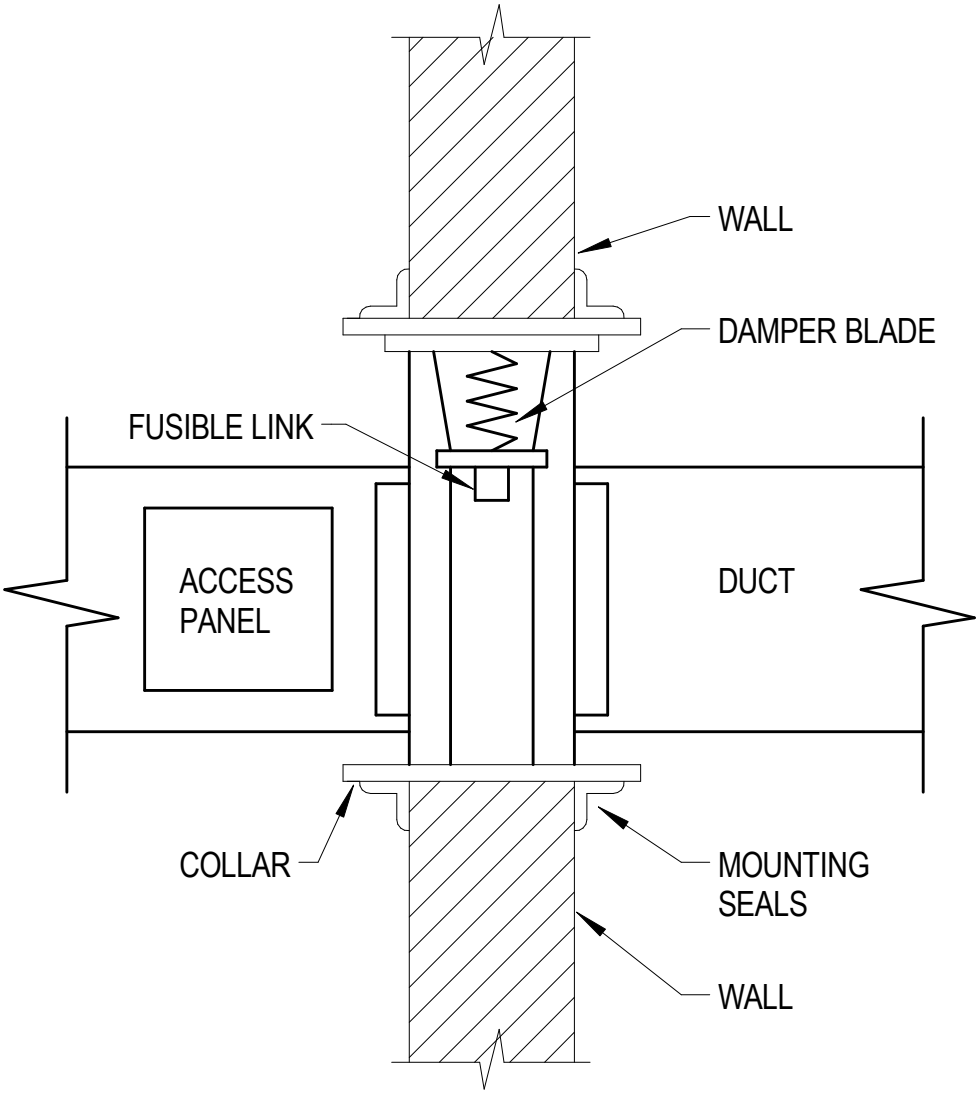

NOTE:
1. ALL DAMPERS MUST HAVE UL LABEL.
2. PROVIDE 14"X14" ACCESS PANEL IN DUCT WHEN SIZE PERMITS. FOR SMALLER DUCTS, MAKE PANEL 2" LESS THAN DUCT.

TYPICAL FIRE DAMPER CURTAIN TYPE

NO SCALE

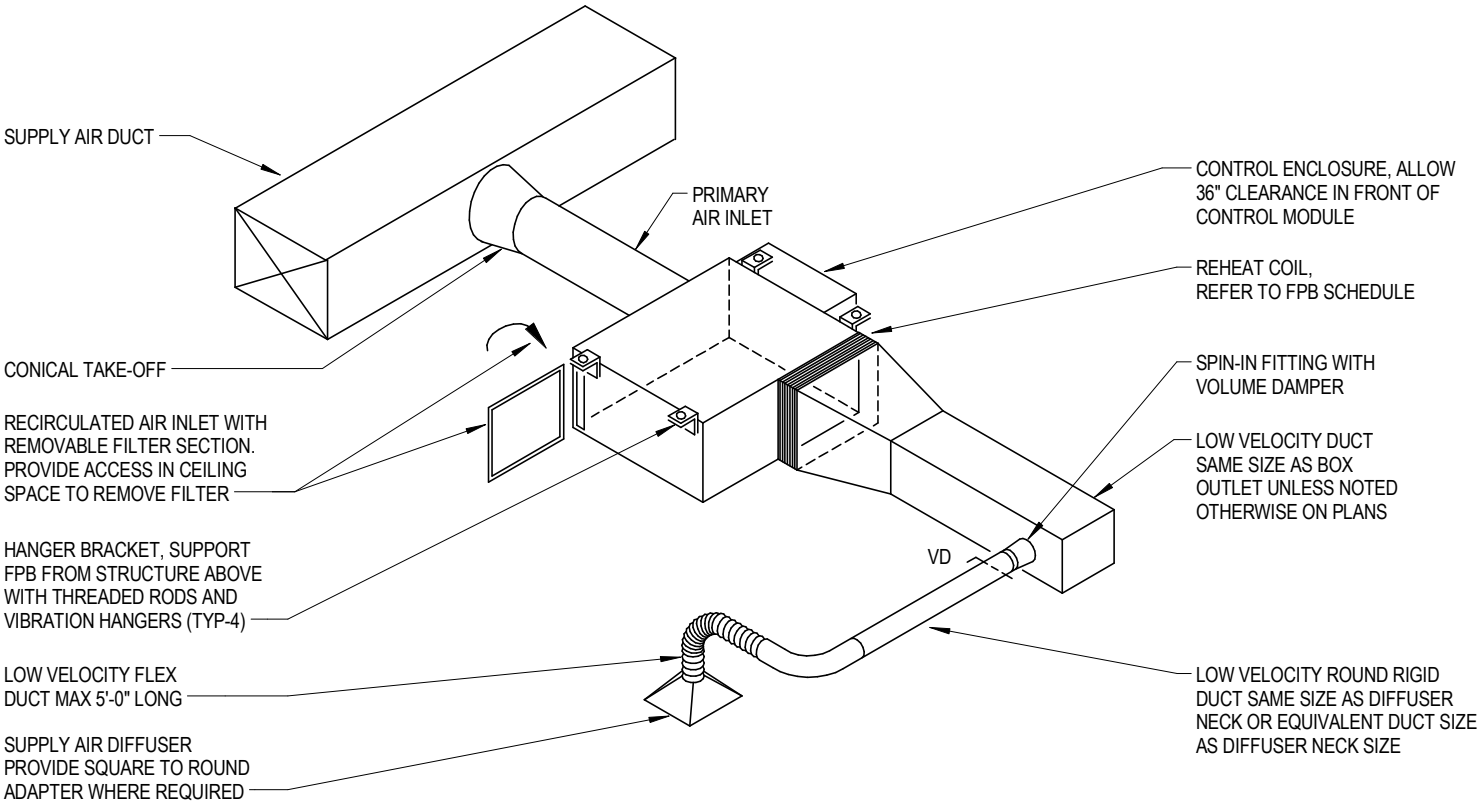

TYPICAL FAN POWERED BOX DETAIL

NO SCALE

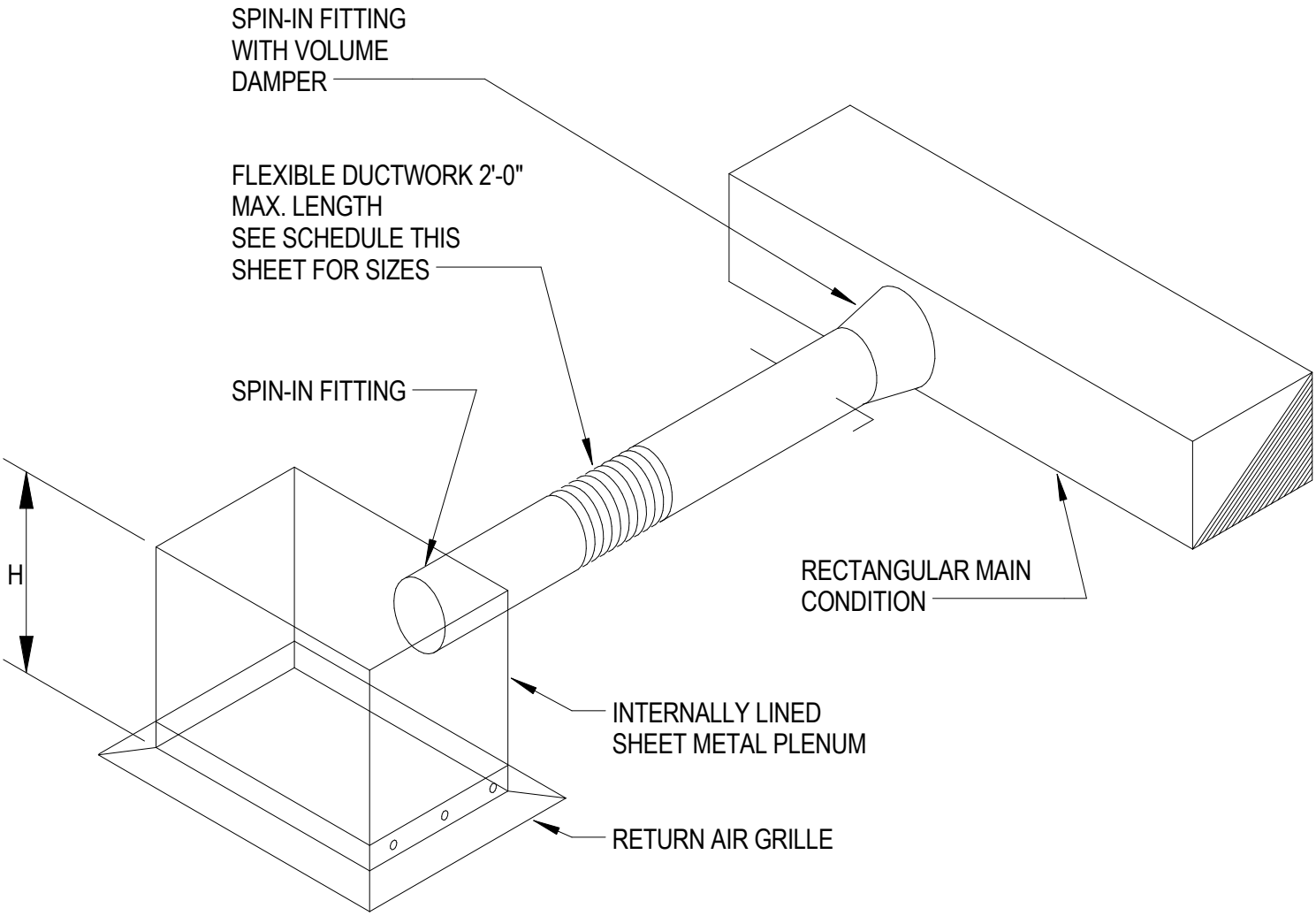

NOTE:
1. HEIGHT H=DIA. OF FLEX. DUCT + 2"

RETURN & EXHAUST AIR GRILLE BRANCH CONNECTION DETAIL

NO SCALE

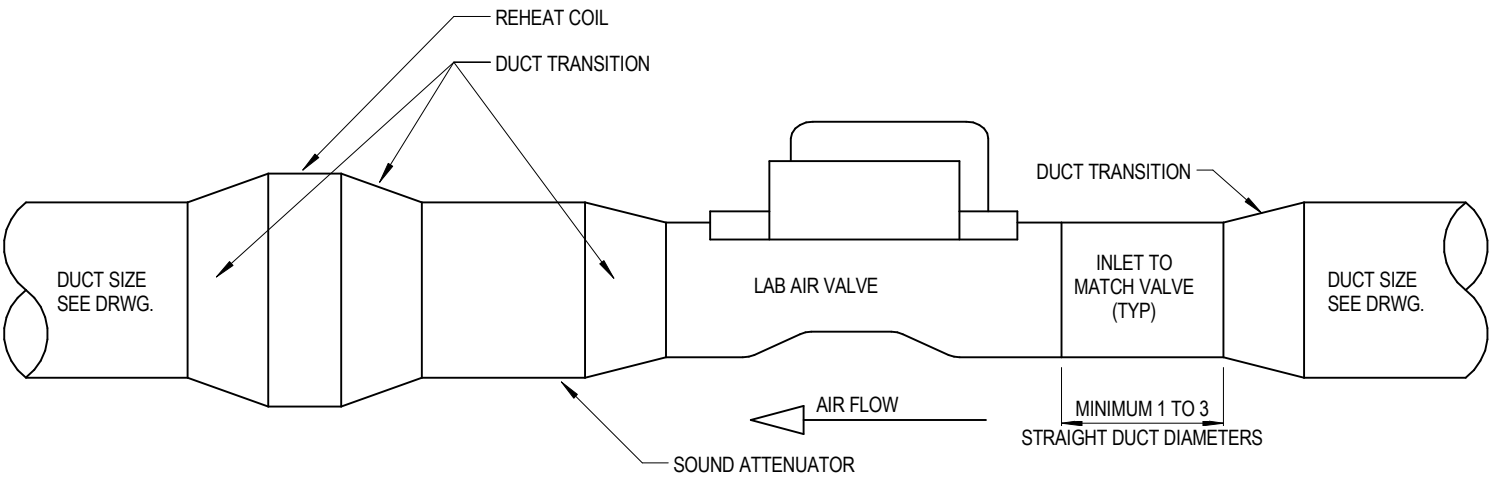

LAB SUPPLY AIR VALVE INSTALLATION DETAIL

NO SCALE

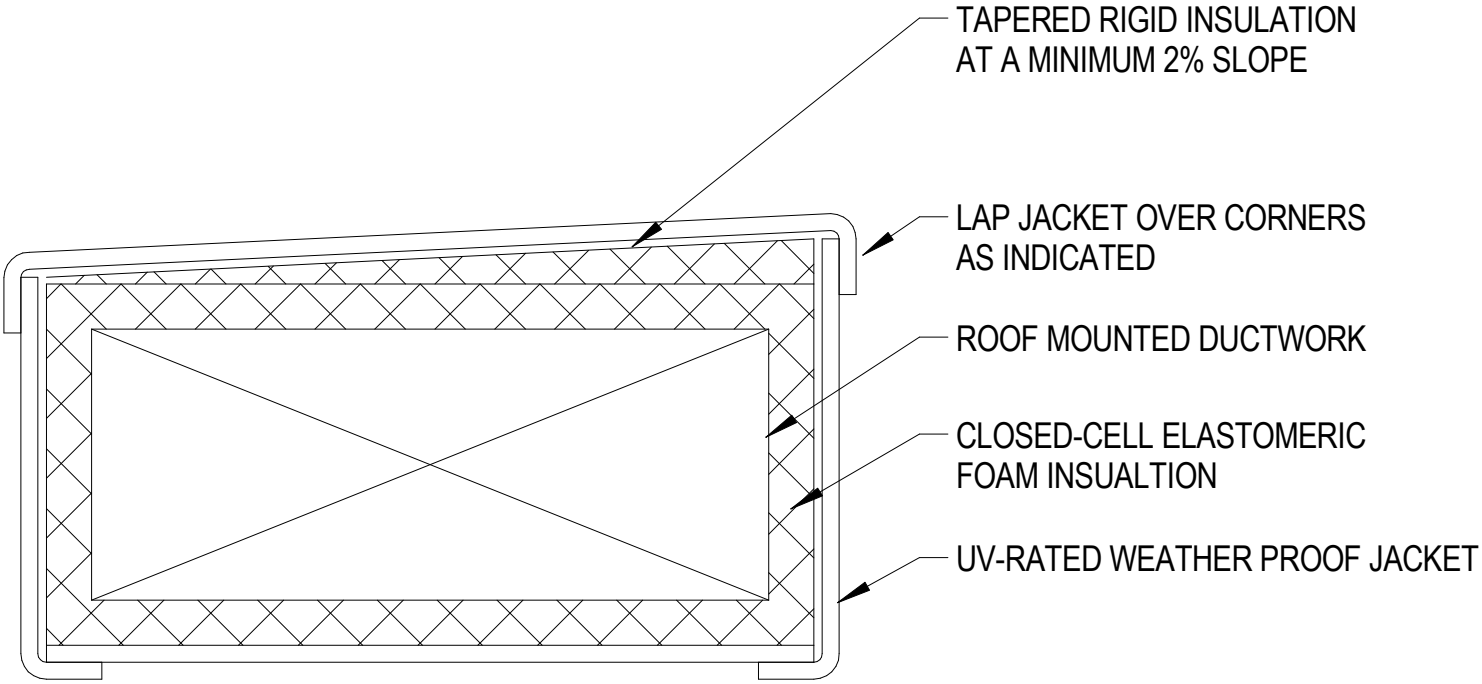

ROOF MOUNTED DUCT INSULATION DETAIL

NO SCALE

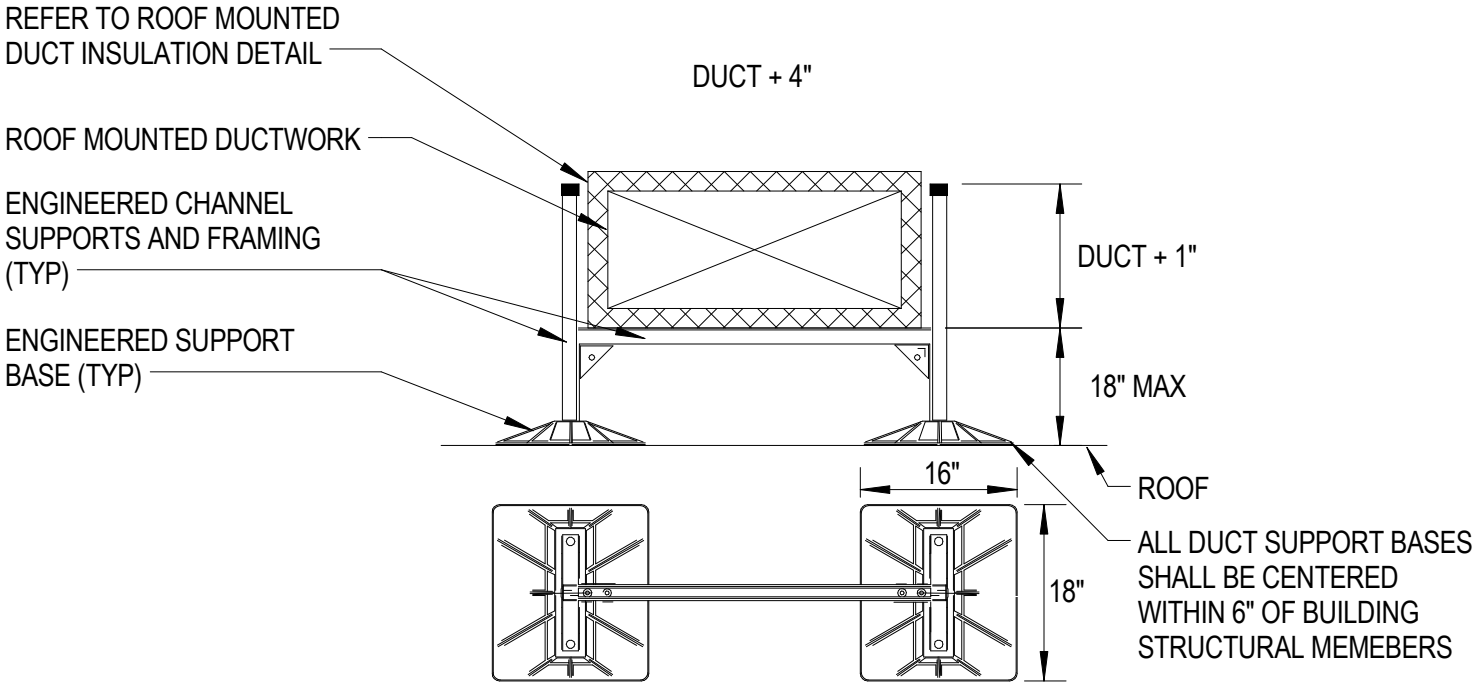

NOTE:
ROOF MOUNTED DUCT SUPPORTS SHALL BE ENGINEERED AS A COMPLETE SYSTEM BY THE DUCT SUPPORT MANUFACTURER. ROOF MOUNTED DUCT SUPPORTS SHALL BE MANUFACTURED BY MIRO INDUSTRIES, INC. OR APPROVED EQUAL.

ROOF MOUNTED DUCT SUPPORT DETAIL

NO SCALE

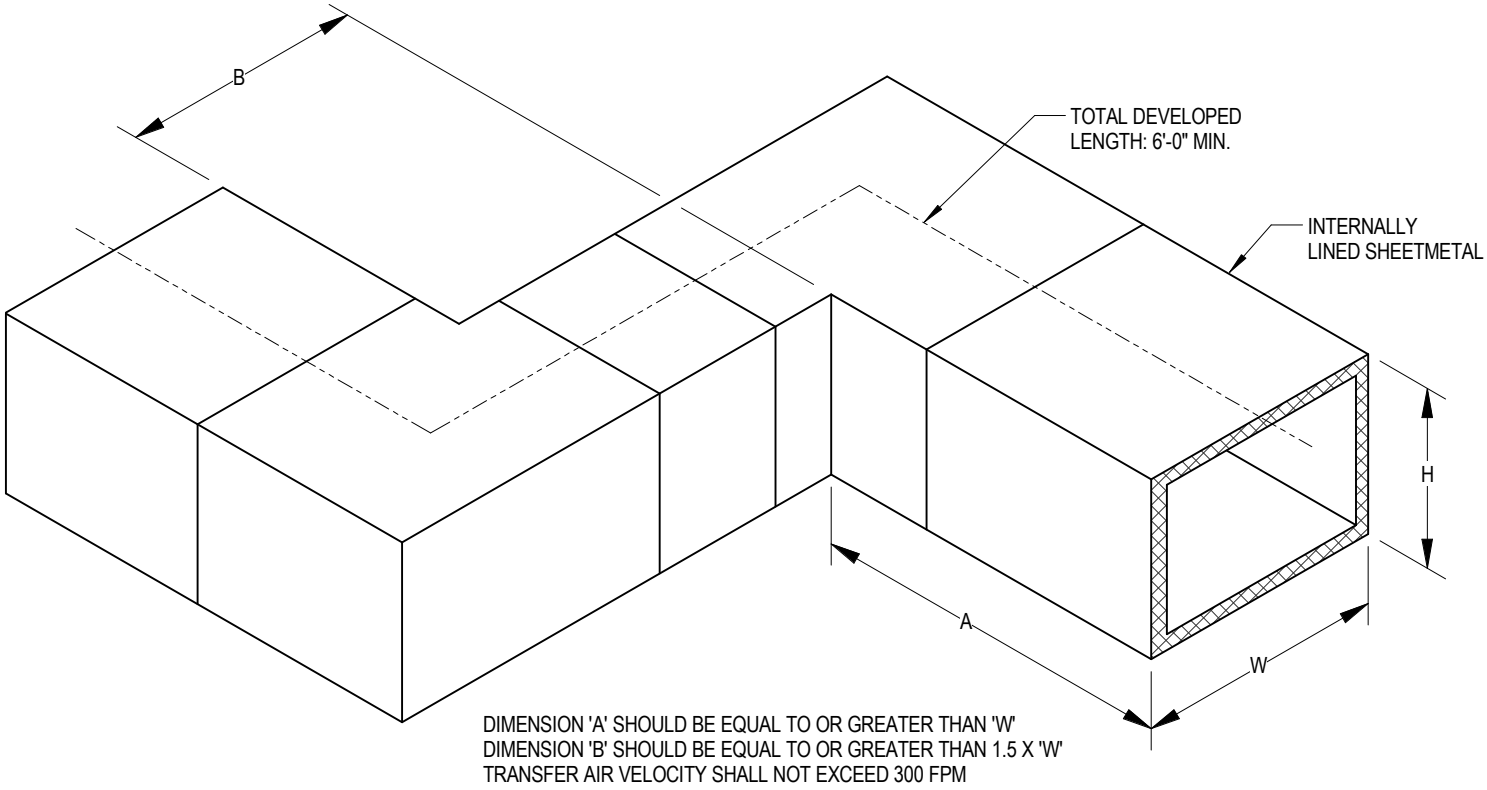

TYPICAL TRANSFER AIR 'Z-DUCT' DETAIL

NO SCALE

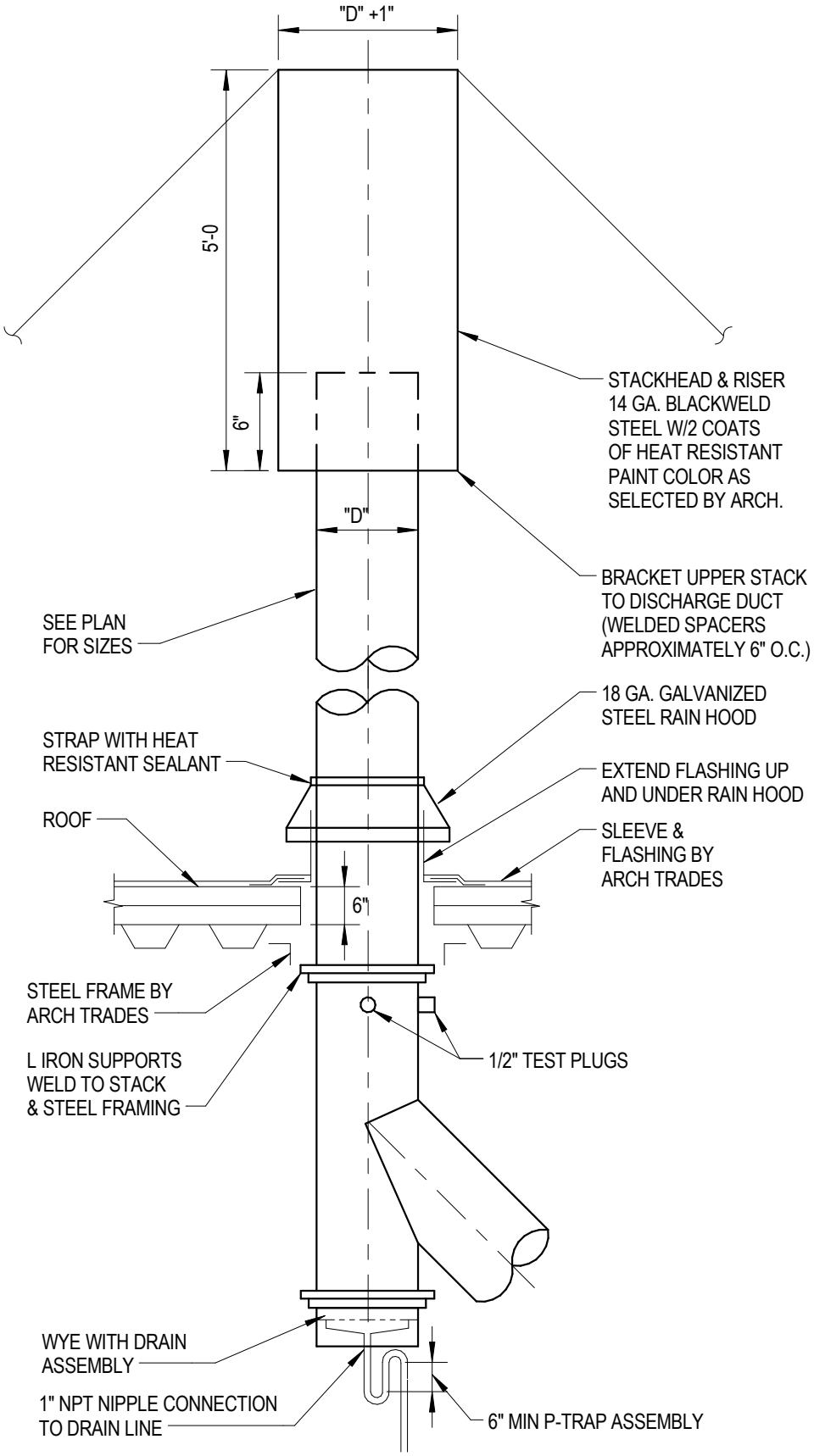

EXHAUST STACK DETAIL

NO SCALE

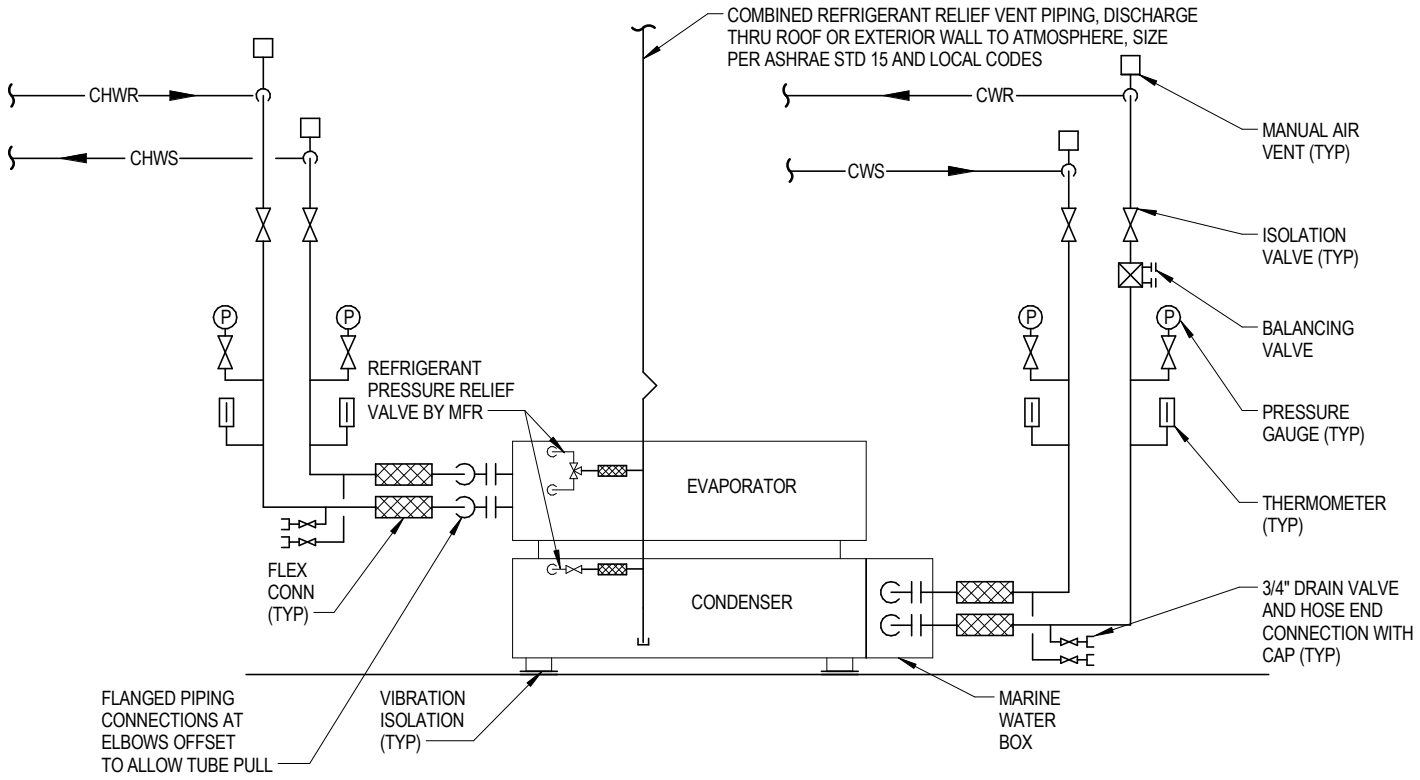

ELECTRIC DRIVE WATER COOLED WATER CHILLER PIPING DIAGRAM

NO SCALE

NOTES:

1. PROVIDE ALL DRAINS AND VENTS AT CHILLER AS RECOMMENDED BY MANUFACTURER.
2. PROVIDE AND INSTALL PIPE THERMOMETER WELLS, SENSOR WELLS & FLOWSWITCH WELDOLETS WHERE REQUIRED OR RECOMMENDED BY MANUFACTURER AND INDICATED ON THE CONTROL DIAGRAM.
3. FIELD VERIFY INLET/OUTLET PIPE CONNECTIONS.
4. PIPING MUST BE ARRANGED AND SUPPORTED TO AVOID STRESS ON CHILLER.

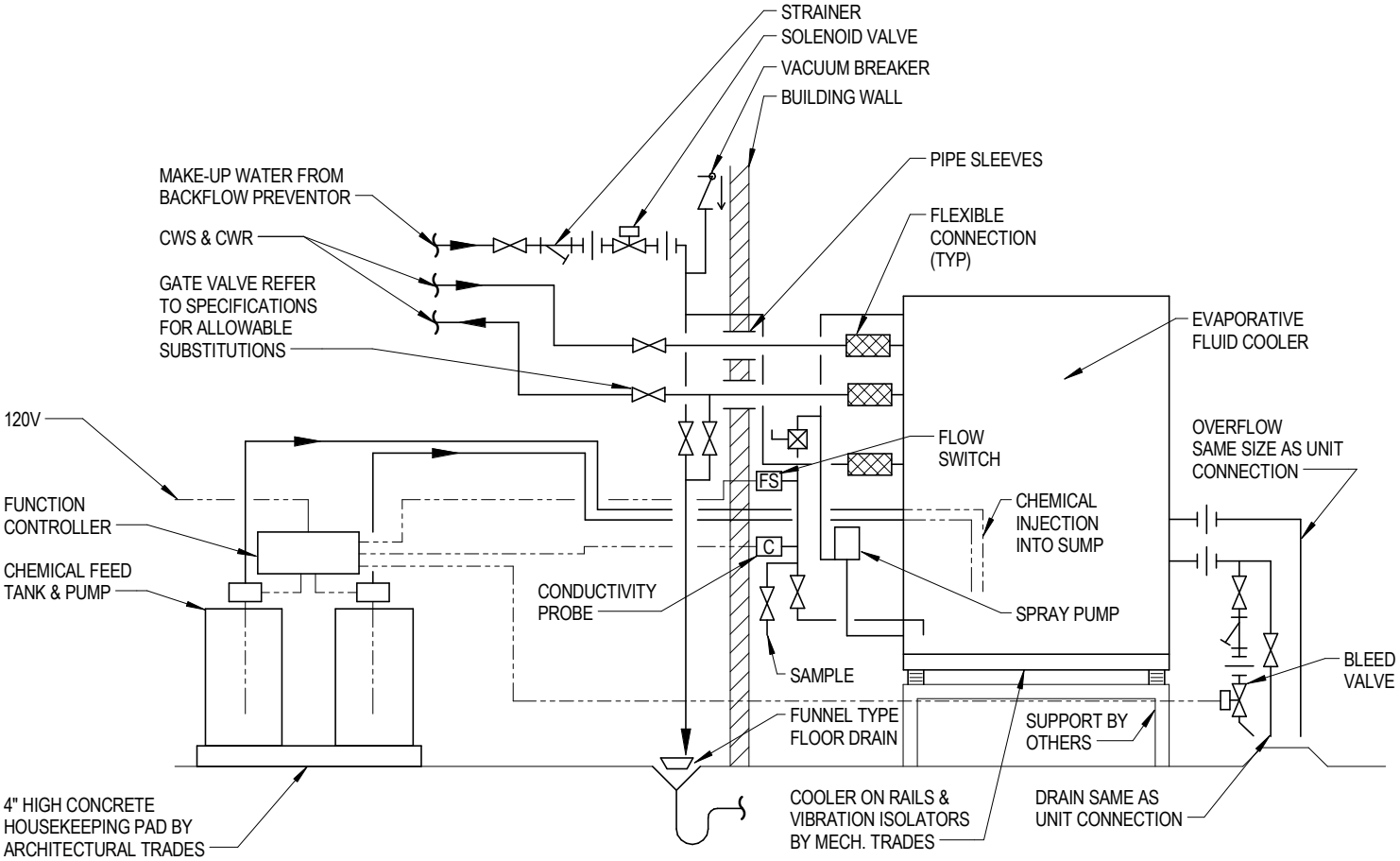

NOTES:

1. THIS DIAGRAM IS FOR GENERAL ARRANGEMENT OF EQUIPMENT ONLY. REFER TO MANUFACTURER FOR PIPING LAYOUT AND SIZE.
2. EVAPORATIVE CONDENSER PIPING DIAGRAM IS SIMILAR.

EVAPORATIVE FLUID COOLER WITH SPRAY WATER TREATMENT PIPING DIAGRAM

NO SCALE

NOTES:

1. THIS DIAGRAM IS FOR GENERAL ARRANGEMENT OF EQUIPMENT ONLY. REFER TO MANUFACTURER FOR PIPING LAYOUT & SIZE.
2. PIPING LAYOUT IS SCHEMATIC ONLY. FINAL LAYOUT AND PIPING SIZING TO BE DETERMINE BY LICENSED REFRIGERATION CONTRACTOR. SUBMIT SHOP DRAWINGS OF FINAL LAYOUT TO ARCH/ENGINEER FOR APPROVAL.

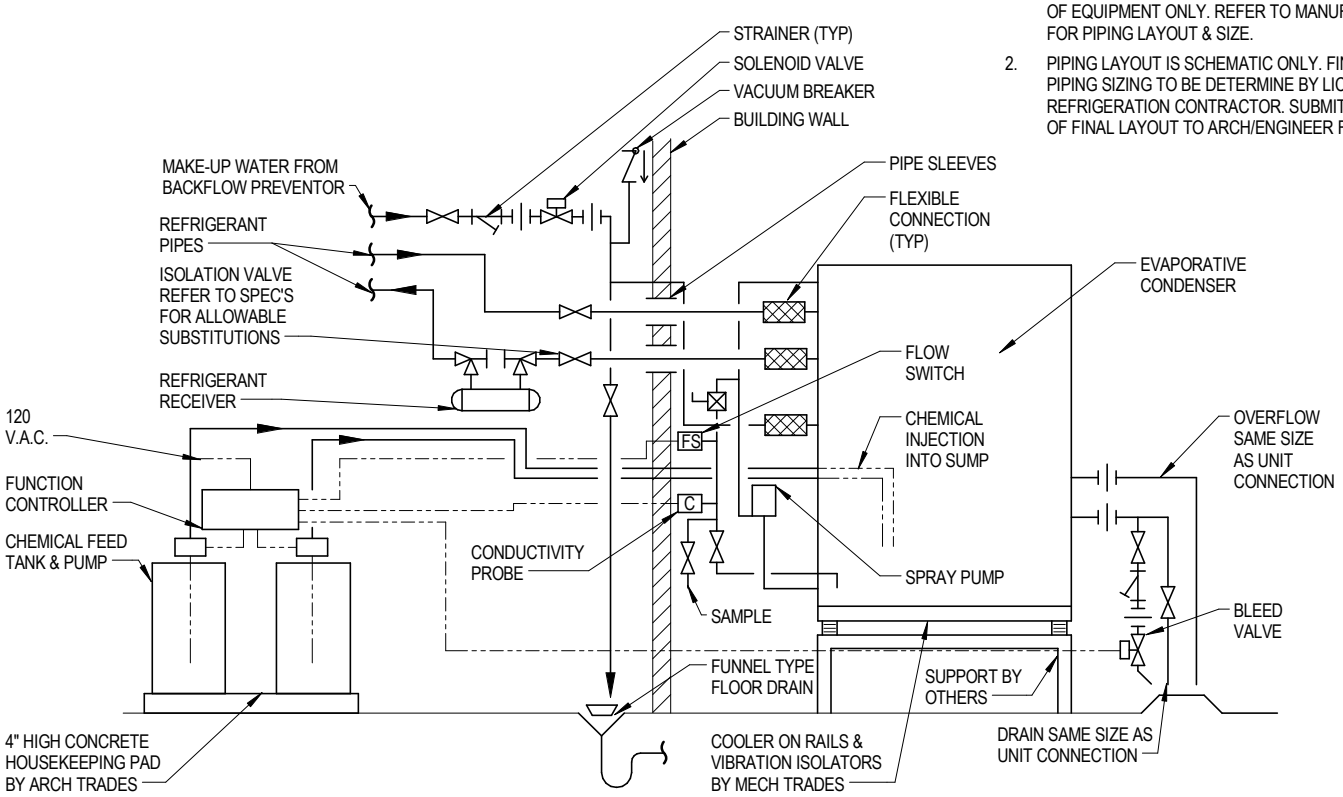

EVAPORATIVE CONDENSER WITH SPRAY WATER TREATMENT PIPING DIAGRAM

NO SCALE

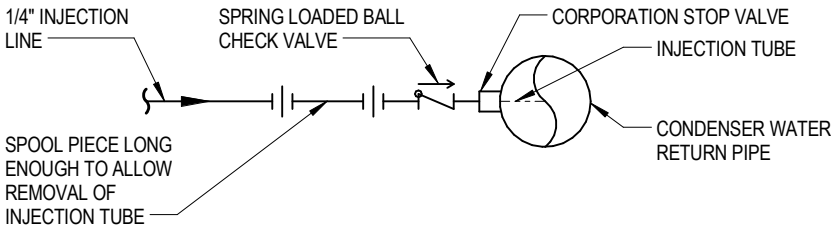

INJECTION ASSEMBLY DETAIL

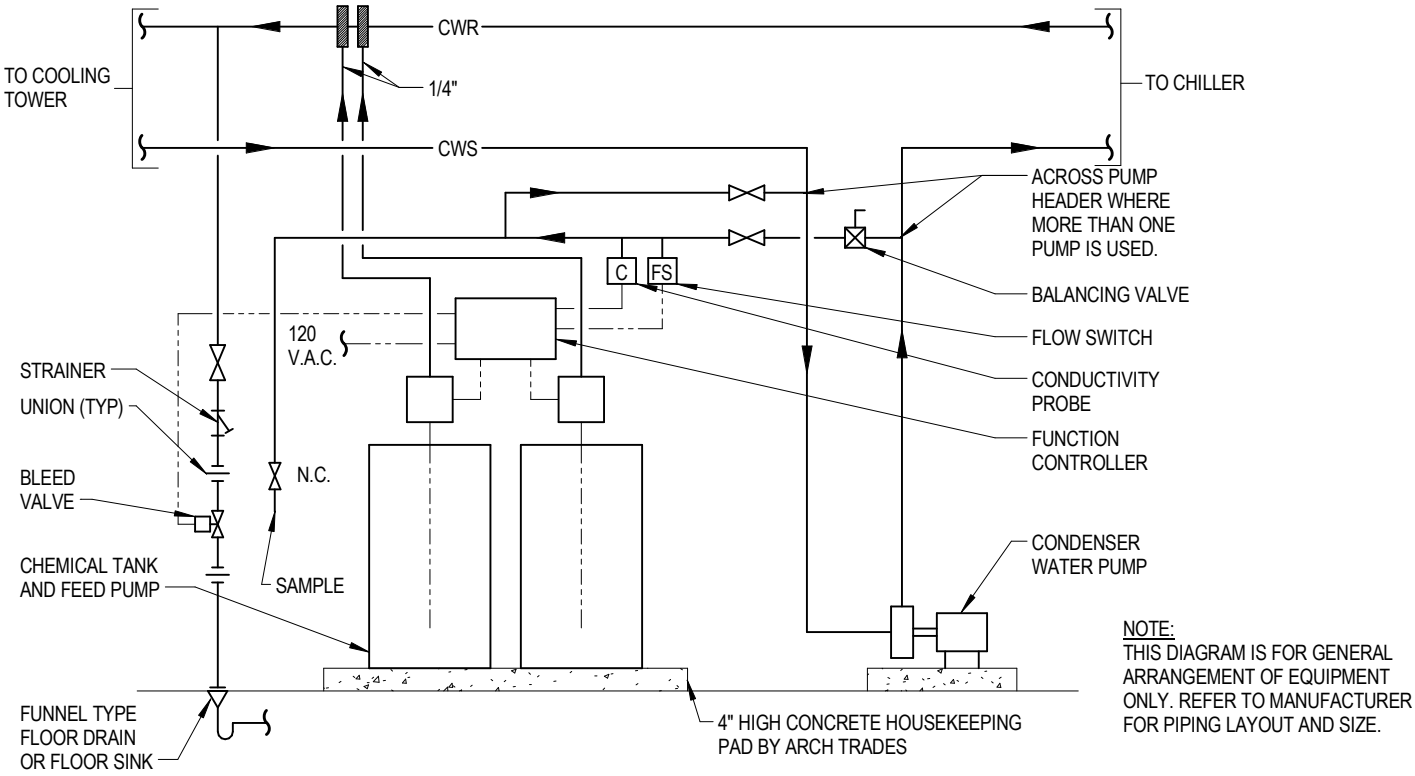

NOTE:
THIS DIAGRAM IS FOR GENERAL ARRANGEMENT OF EQUIPMENT ONLY. REFER TO MANUFACTURER FOR PIPING LAYOUT AND SIZE.

CONDUCTIVITY CONTROLLED CONDENSER WATER TREATMENT DIAGRAM

NO SCALE

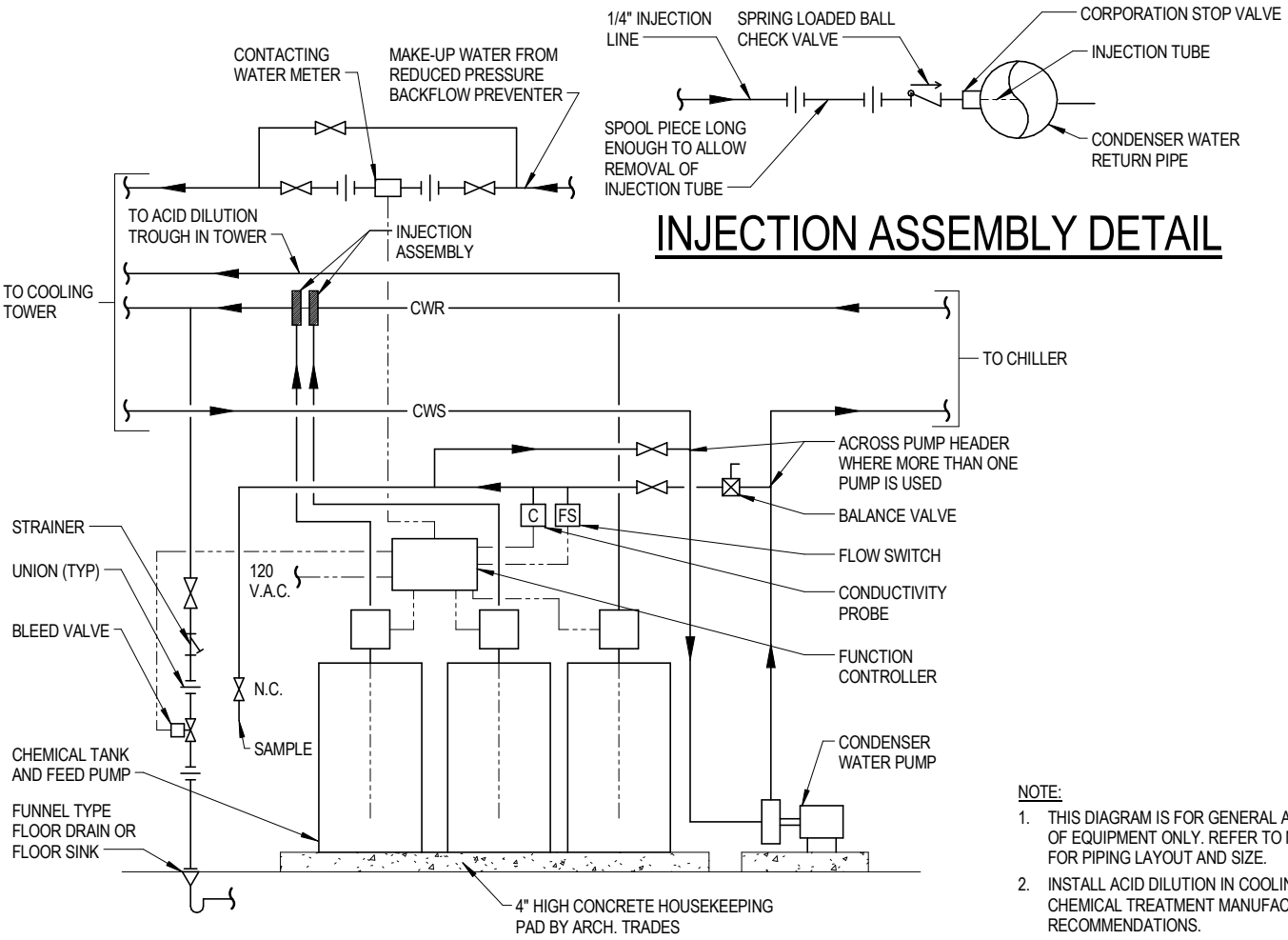

NOTE:

1. THIS DIAGRAM IS FOR GENERAL ARRANGEMENT OF EQUIPMENT ONLY. REFER TO MANUFACTURER FOR PIPING LAYOUT AND SIZE.
2. INSTALL ACID DILUTION IN COOLING TOWER PER CHEMICAL TREATMENT MANUFACTURERS RECOMMENDATIONS.

CONDUCTIVITY/FLOW PROPORTIONAL CONTROLLED CONDENSER WATER TREATMENT DIAGRAM

NO SCALE

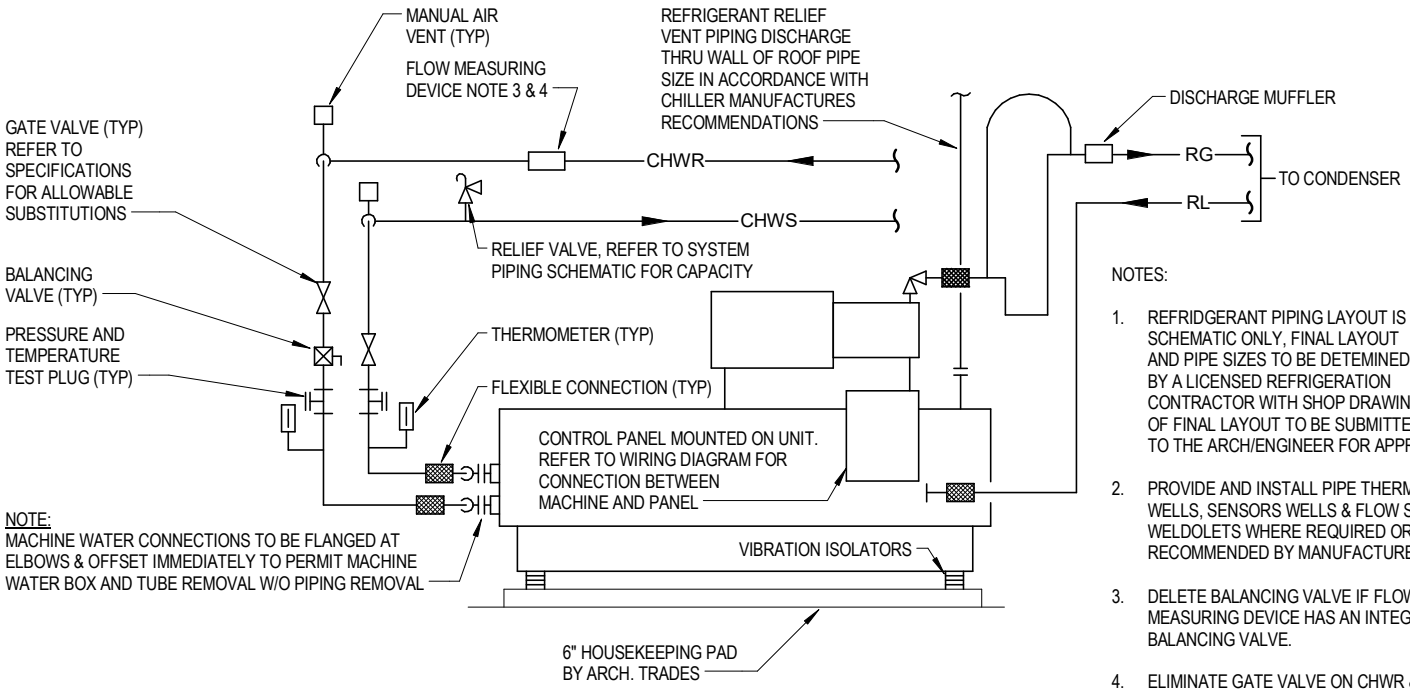

NOTES:

1. REFRIDGERANT PIPING LAYOUT IS SCHEMATIC ONLY, FINAL LAYOUT AND PIPE SIZES TO BE DETEMINED BY A LICENSED REFRIGERATION CONTRACTOR WITH SHOP DRAWINGS OF FINAL LAYOUT TO BE SUBMITTED TO THE ARCH/ENGINEER FOR APPROVAL.
2. PROVIDE AND INSTALL PIPE THERMOMETER WELLS, SENSORS WELLS & FLOW SWITCH WELDOLETS WHERE REQUIRED OR RECOMMENDED BY MANUFACTURER.
3. DELETE BALANCING VALVE IF FLOW MEASURING DEVICE HAS AN INTEGRAL BALANCING VALVE.
4. ELIMINATE GATE VALVE ON CHWR & CWR IF THE INTEGRAL BALANCING VALVE IS A TIGHT SHUT-OFF TYPLE.
5. ONE RERIGERATION CIRCUIT SHOWN, MULTIPLE CIRCUITS MAY BE REQUIRED. VERIFY EQUIPMENT APPROVED BY ENGINEER.

RECIPROCATING AIR COOLED WATER CHILLER PIPING DIAGRAM

NO SCALE

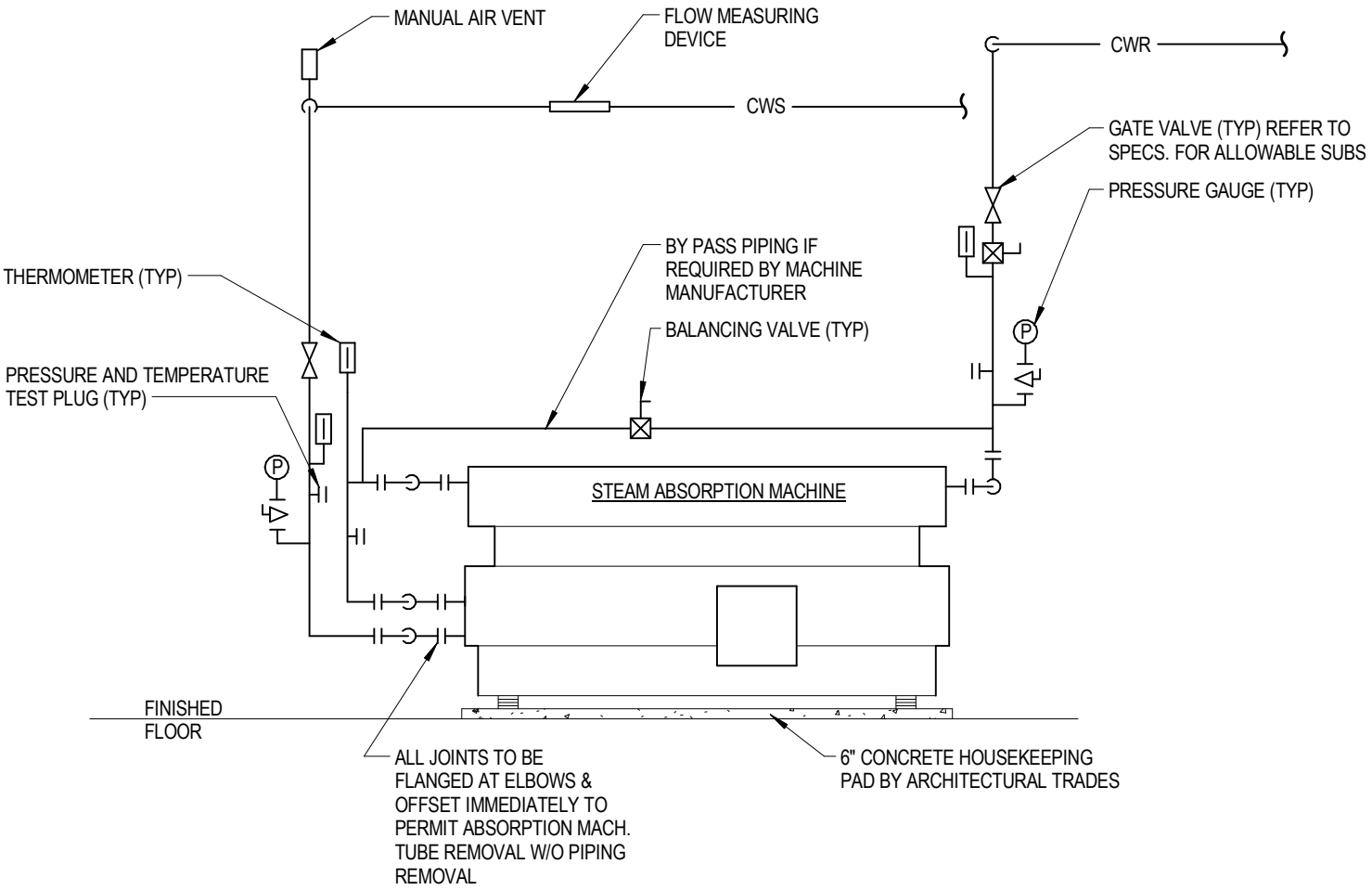

STEAM ABSORPTION MACHINE CONDENSER WATER SCHEMATIC PIPING DIAGRAM

NO SCALE

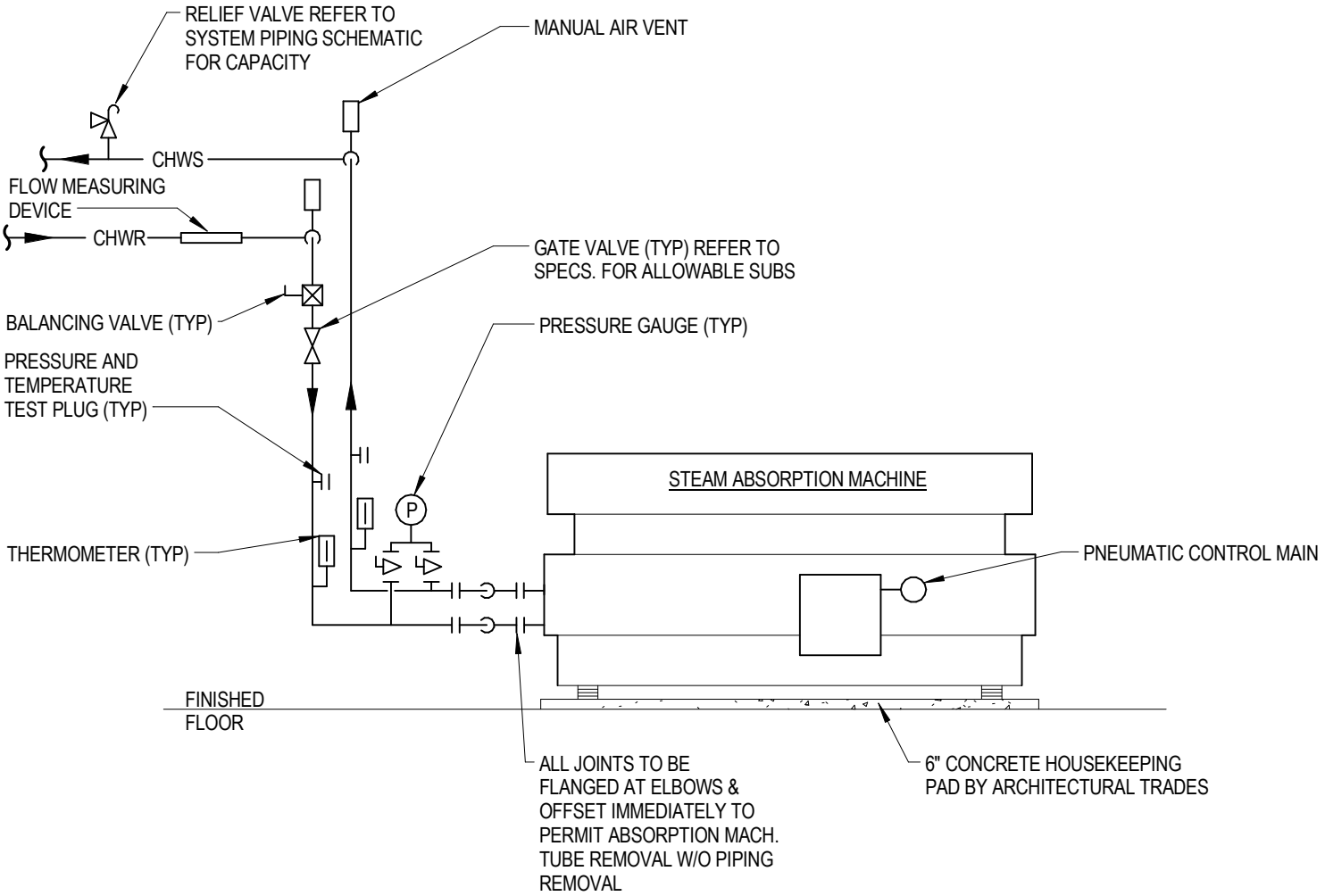

STEAM ABSORPTION MACHINE CHILLED WATER SCHEMATIC PIPING DIAGRAM

NO SCALE

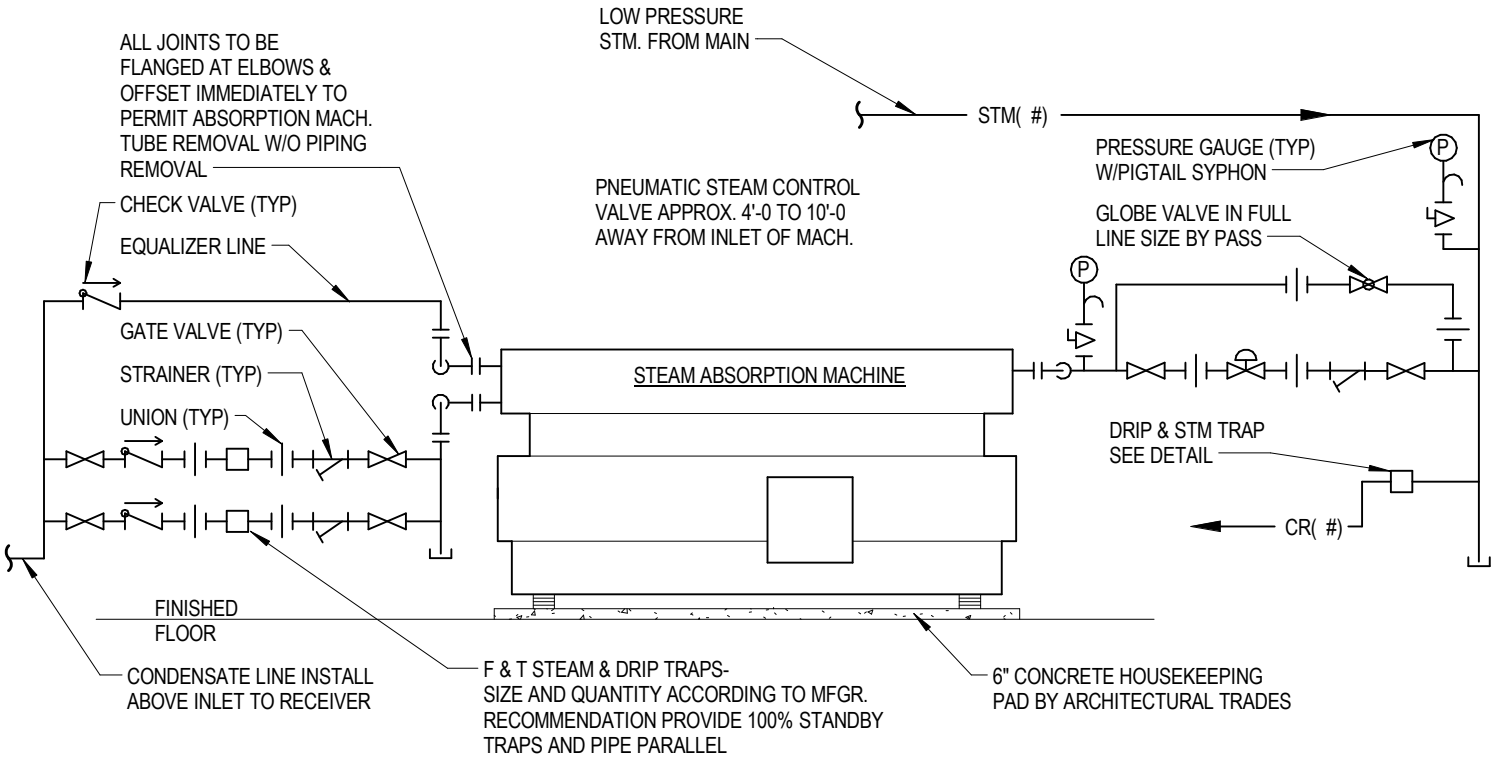

STEAM ABSORPTION MACHINE STEAM AND CONDENSATE SCHEMATIC PIPING DIAGRAM

NO SCALE

NOTES

1. PROVIDE & INSTALL PIPE THERMOMETER WELLS, SENSOR WELLS & FLOW SWITCH WELDOLETS WHERE REQUIRED OR RECOMMENDED BY MFGR.
2. DELETE BALANCING VALVE IF FLOW MEASURING DEVICE HAS AN INTEGRAL BALANCING VALVE.
3. ELIMINATE GATE VALVE IN CHWR & CWR LINE IF THE INTEGRAL BALANCING VALVE IS A TIGHT SHUT-OFF TYPE.

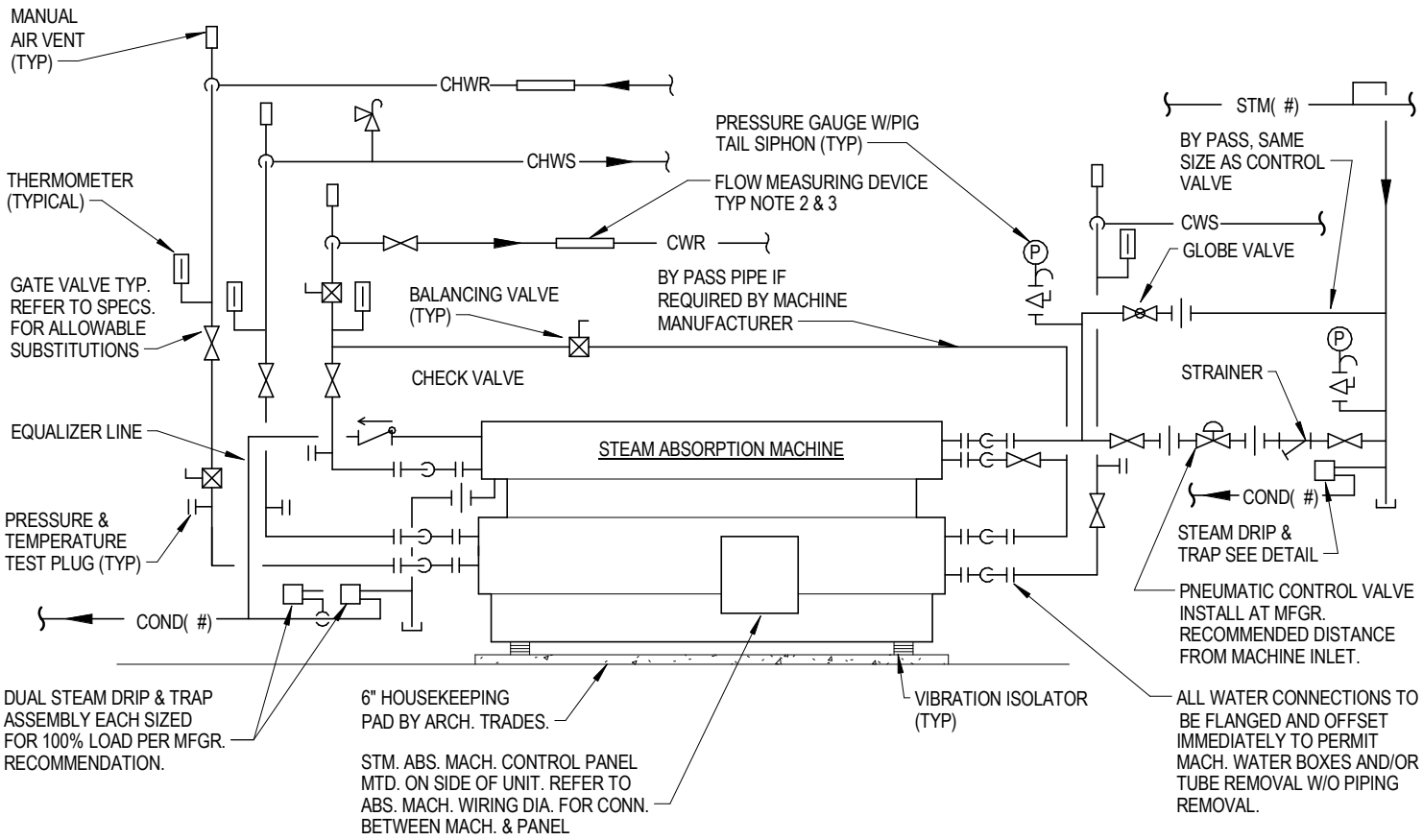

STEAM ABSORPTION CHILLER PIPING DIAGRAM

NO SCALE

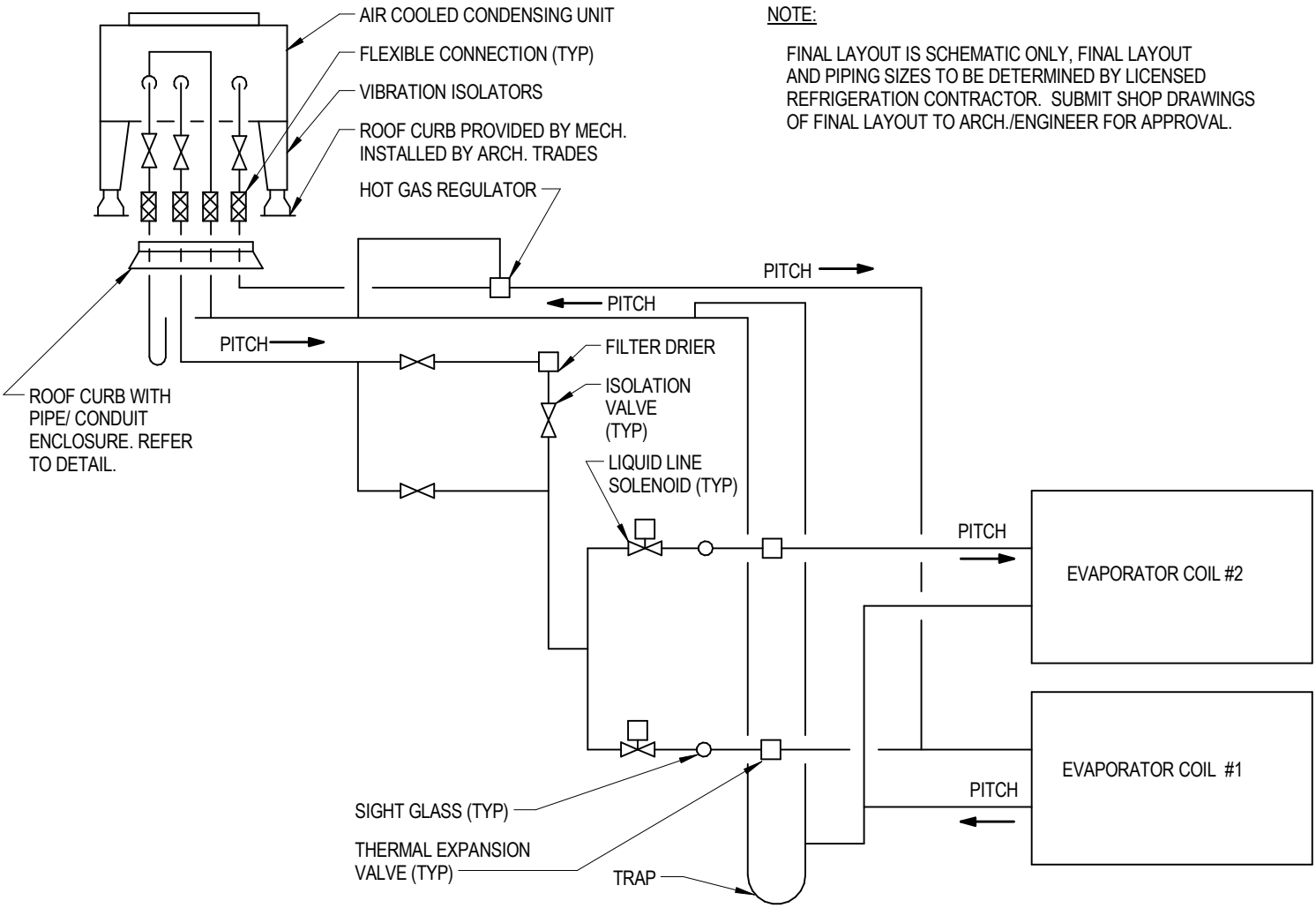

NOTE:

FINAL LAYOUT IS SCHEMATIC ONLY, FINAL LAYOUT AND PIPING SIZES TO BE DETERMINED BY LICENSED REFRIGERATION CONTRACTOR. SUBMIT SHOP DRAWINGS OF FINAL LAYOUT TO ARCH./ENGINEER FOR APPROVAL.

CONDENSING UNIT PIPING DIAGRAM

NO SCALE

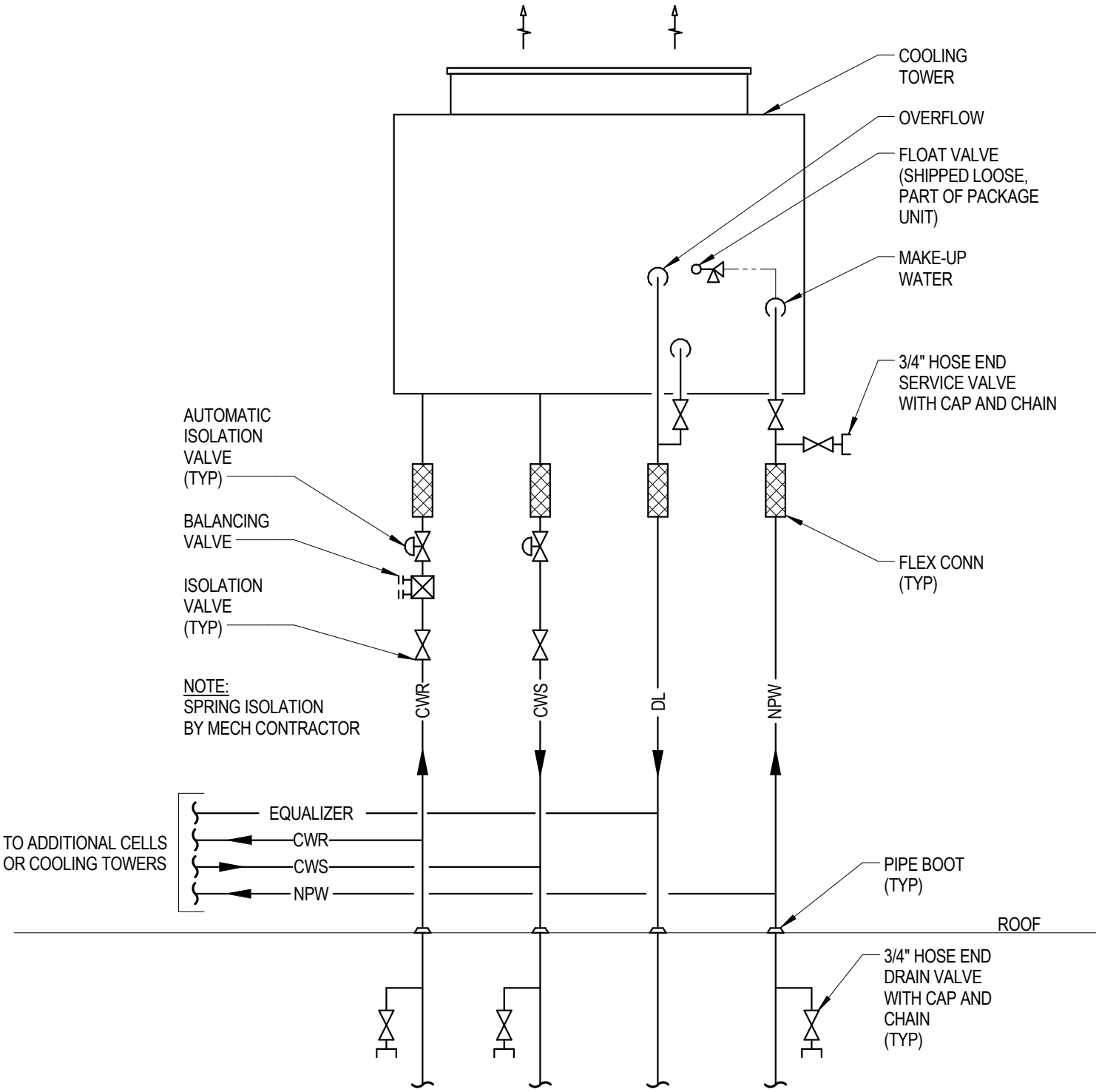

COOLING TOWER PIPING DETAIL

NO SCALE

NOTE TO EDITOR: COORDINATE AUTOMATIC ISOLATION VALVES WITH TEMPERATURE CONTROLS DESIGNER. SOME CLIENTS DO NOT ISOLATE TOWERS AUTOMATICALLY.

NOTES:

1. COOLING TOWER MANUFACTURER TO PROVIDE TILE FILL, MIST ELIMINATORS WITH STAINLESS STEEL ACCESS DOOR, FAN ASSEMBLY, MOTOR DRIVE AND SPEED REDUCER, DRIVE SHAFT, CONDENSER WATER DISTRIBUTION SYSTEM, AND CAST IRON LINTELS FOR TILE FILL SUPPORTS. REFER TO C.T. SPECIFICATIONS FOR MECH. TRADES RESPONSIBILITIES.

2. MECH. TRADAES TO EXTEND 16" CR FROM NEW BUILDING TO FLANGED FACE 6" BELOW TOP OF FILL SUPPORT BEAM AND PROVIDE PIPING CONNECTIONS AND PIPING SUPPORTS.

3. GENERAL CONTRACTOR TO COORDINATE WORK BETWEEN THE VARIOUS TRADES.

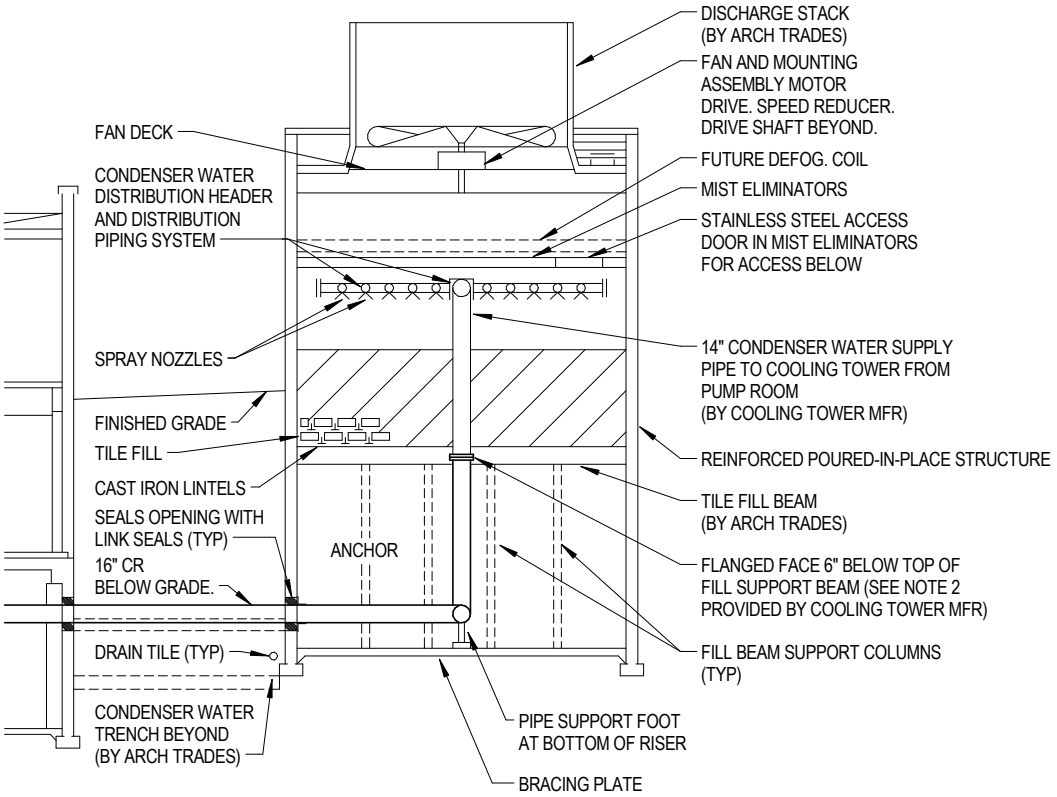

CERAMIC COOLING TOWER PIPING DIAGRAM

(NO SCALE)

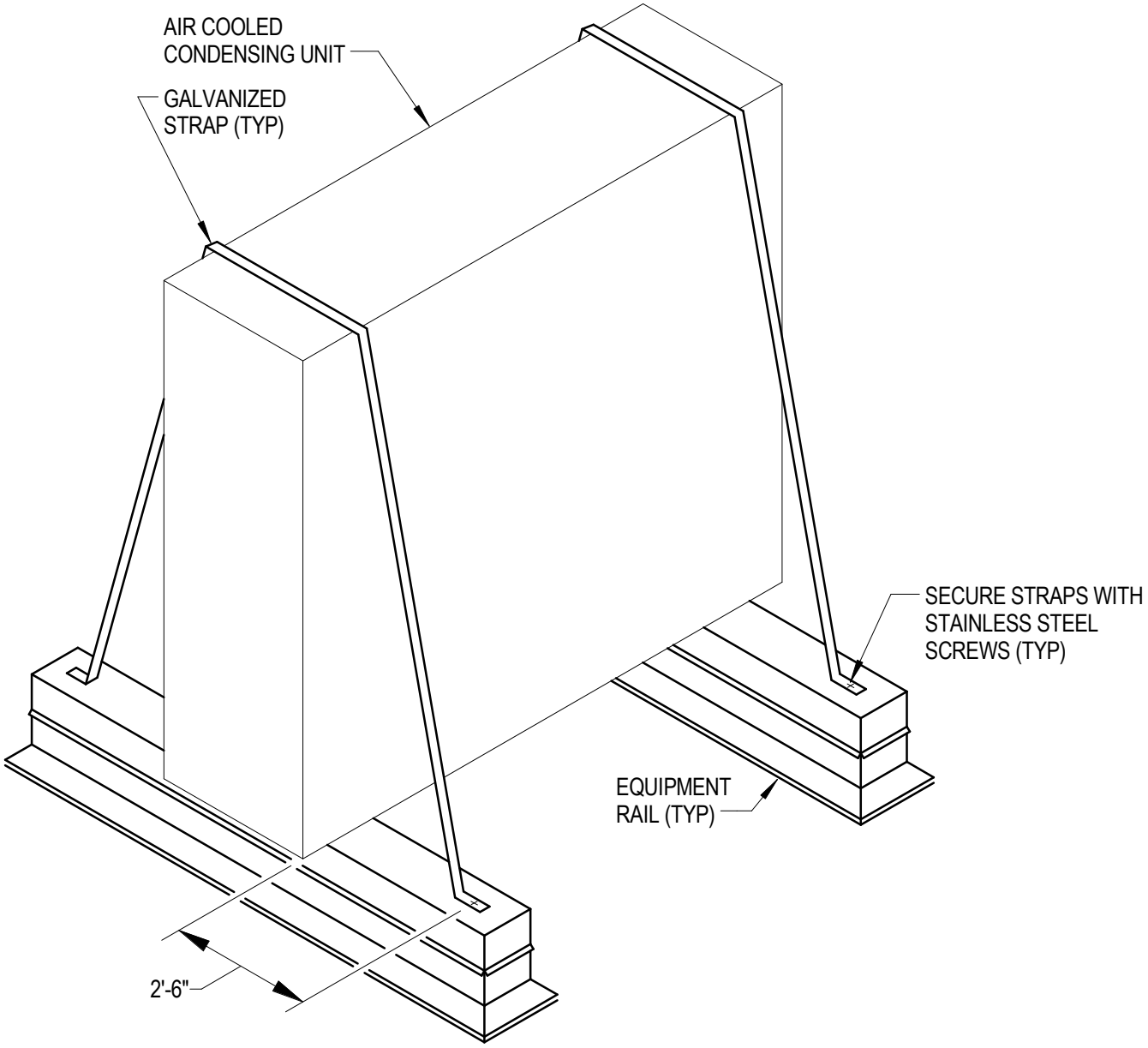

AIR COOLED CONDENSING UNIT STRAP DIAGRAM

NO SCALE

DESIGNER:

1. STEAM COILS OVER 6 FEET IN LENGTH SHALL BE FACE SPLIT BLANK PIPED FROM BOTH ENDS.
2. COILS W/ENTERING AIR TEMPERATURE LESS THAN 40^ F SHALL BE INTEGRAL FACE & BYPASS TYPE.

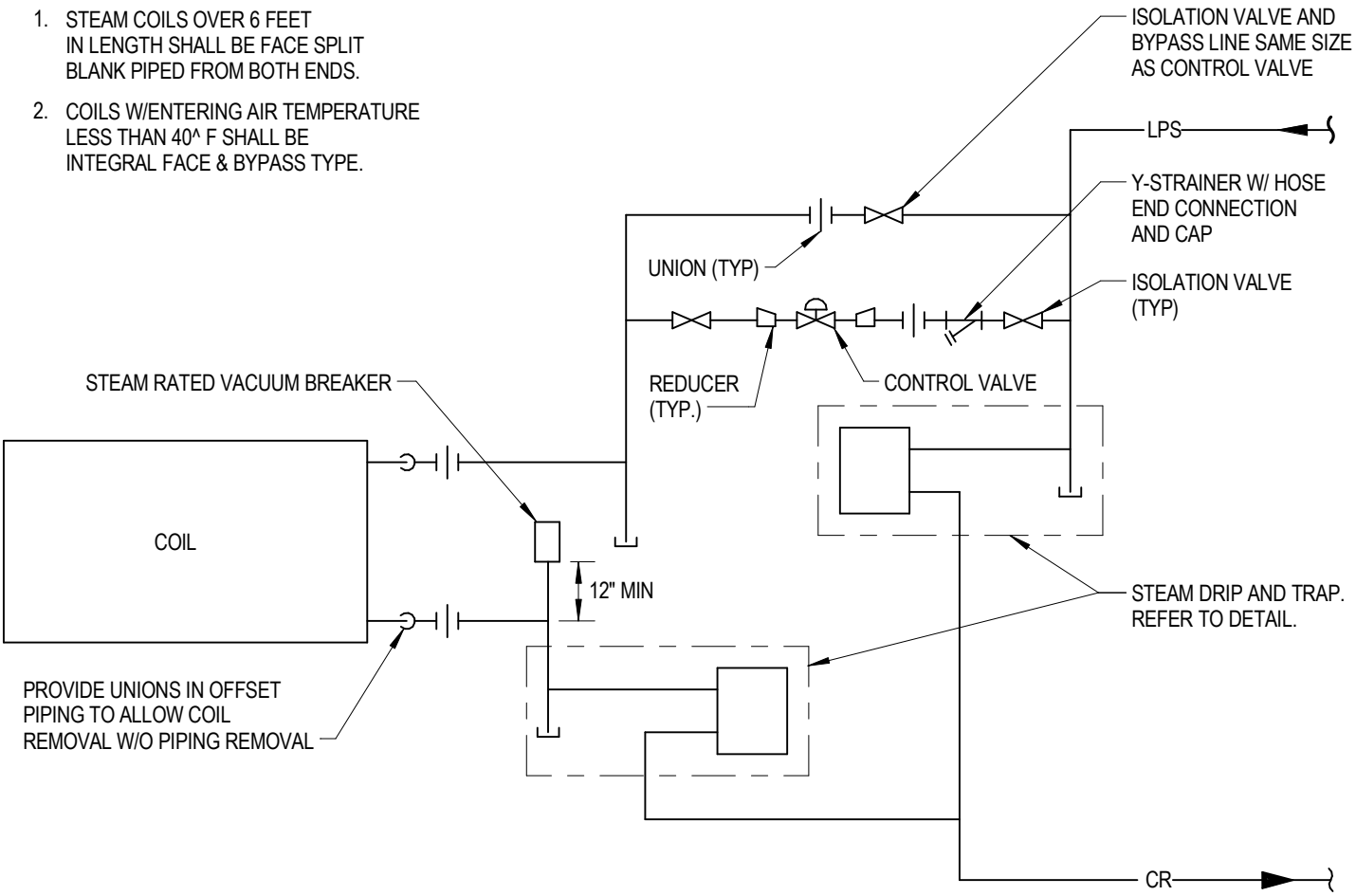

STEAM HEATING COIL PIPING DIAGRAM

NO SCALE

DESINGER NOTES:

1. IF COIL TEMPERATURE RISE IS GREATER THAN 15^, USE 1/3-2/3 CONTROL VALVE ARRANGEMENT
2. COILS WITH ENTERING AIR TEMPERATURE LESS THAN 40^ F SHALL BE INTEGRAL FACE & BYPASS TYPE.

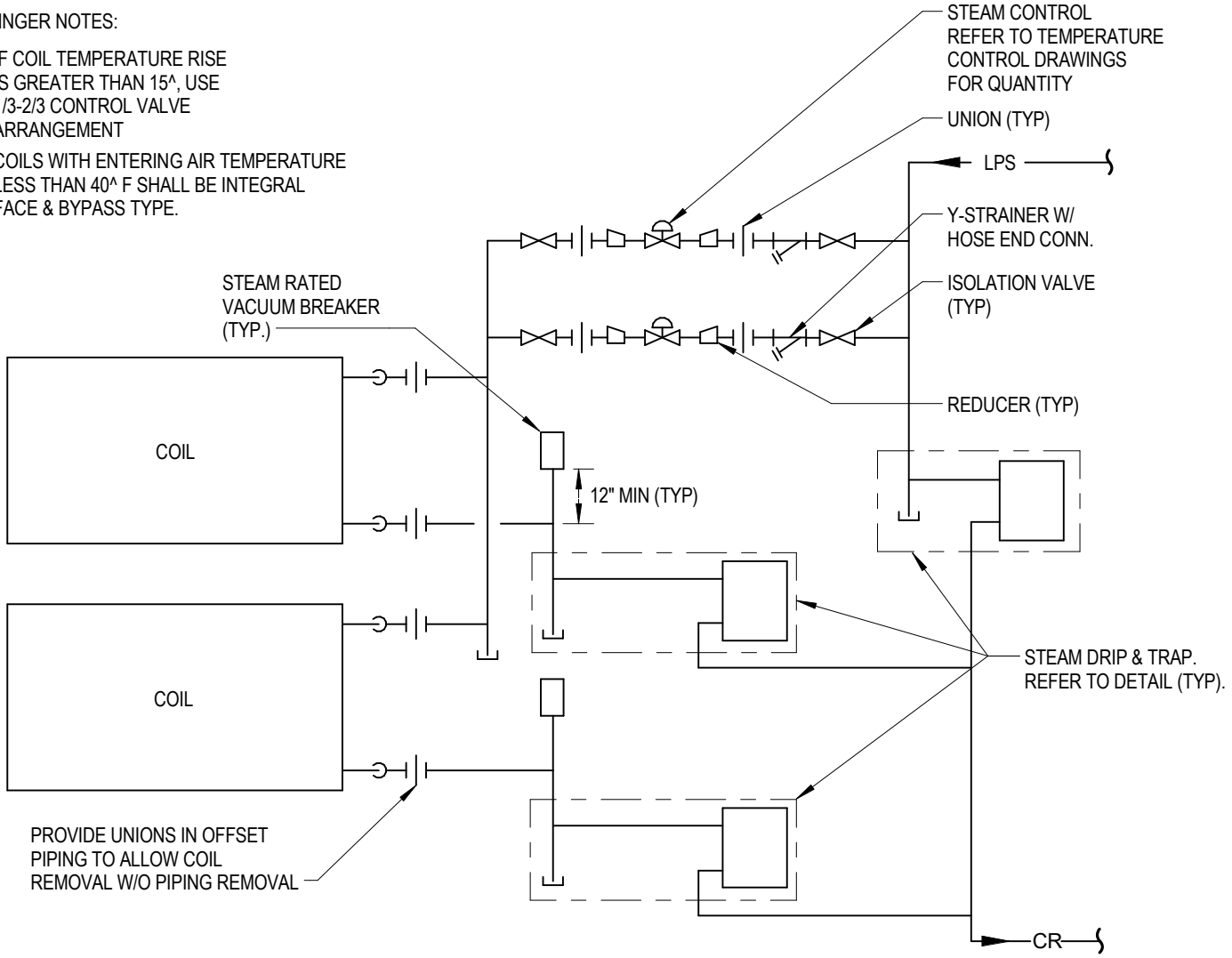

NOTE: VERIFY NUMBER OF COILS AND COIL BANKS WITH APPROVED EQUIPMENT SUBMITTALS. PROVIDE PIPING AS INDICATED FOR EACH COIL.

STEAM HEATING COIL PIPING DIAGRAM

NO SCALE

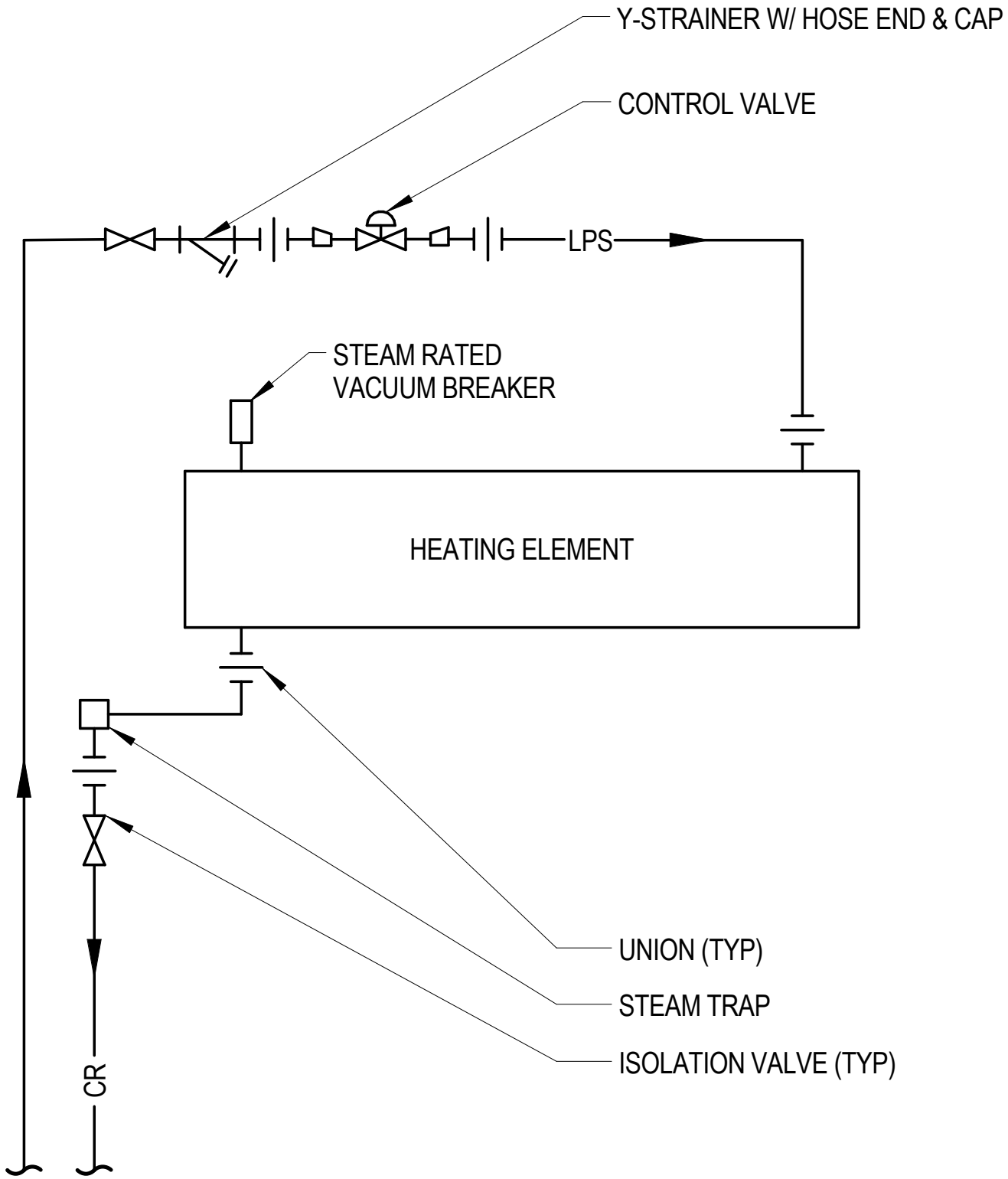

STEAM CONVECTOR OR CABINET UNIT HEATER PIPING DIAGRAM

NO SCALE

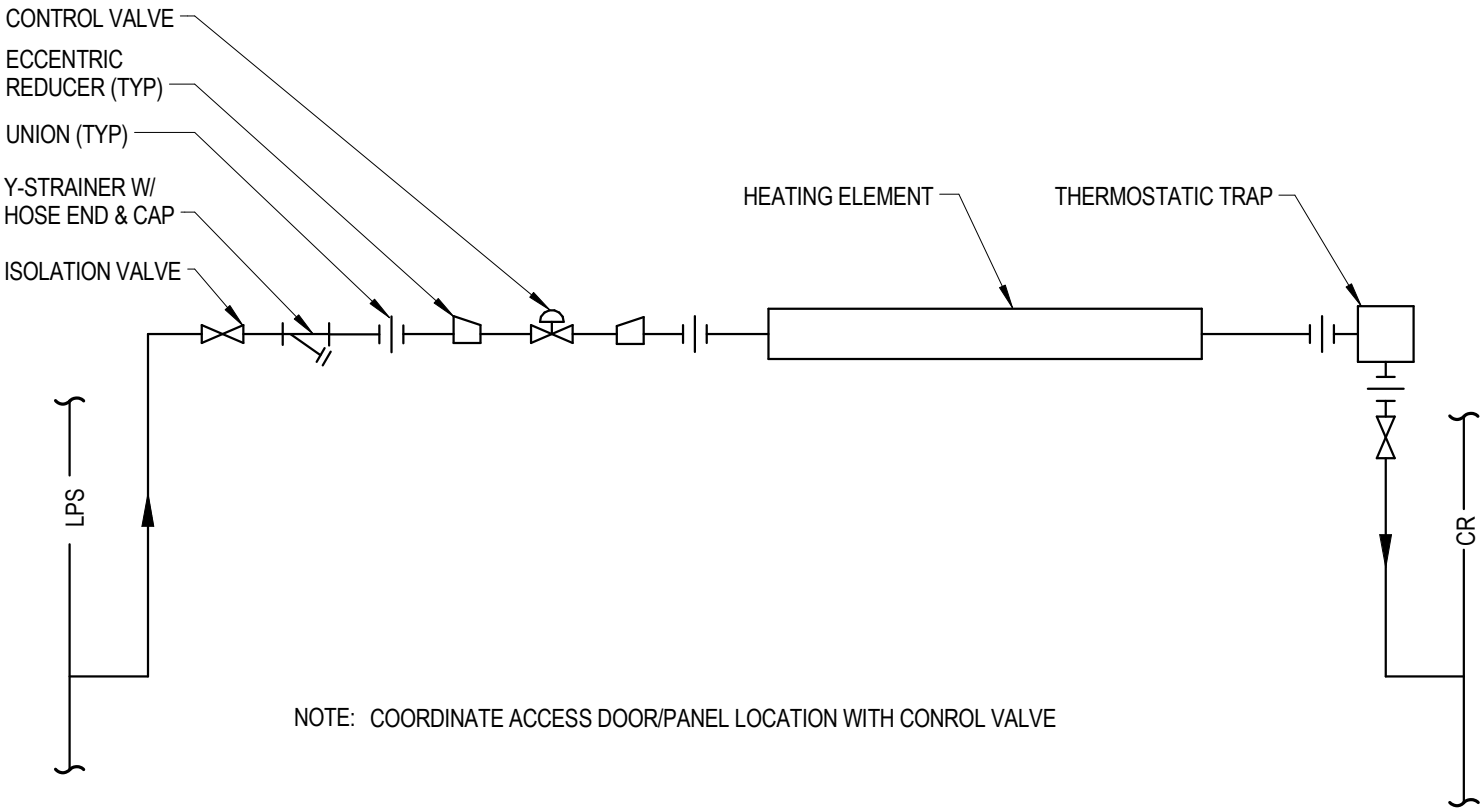

NOTE: COORDINATE ACCESS DOOR/PANEL LOCATION WITH CONROL VALVE

STEAM FINNED TUBE RADIATION PIPING DIAGRAM

NO SCALE

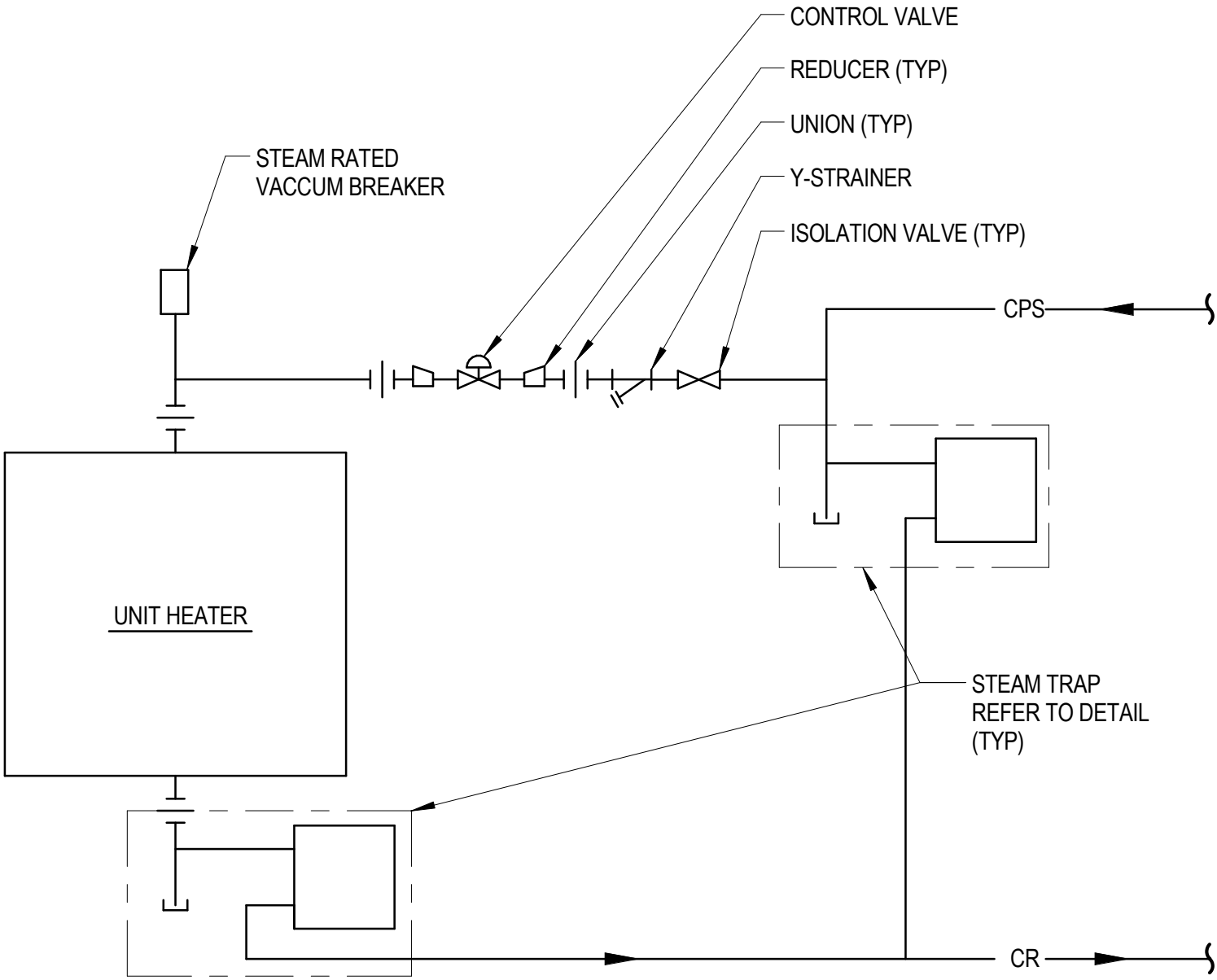

STEAM UNIT HEATER PIPING DIAGRAM

NO SCALE

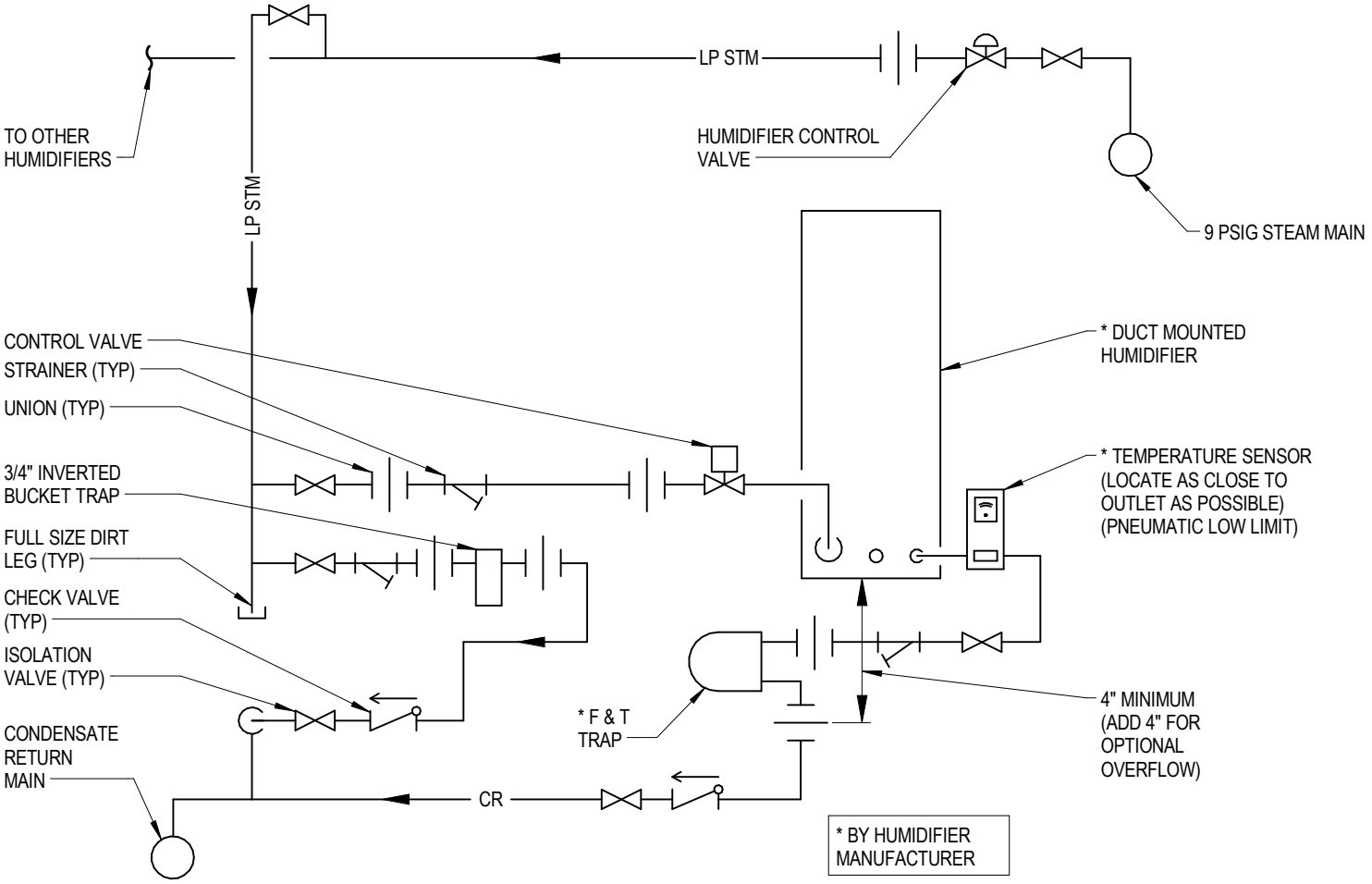

PIPING CONNECTIONS FOR STEAM HUMIDIFIER

NO SCALE

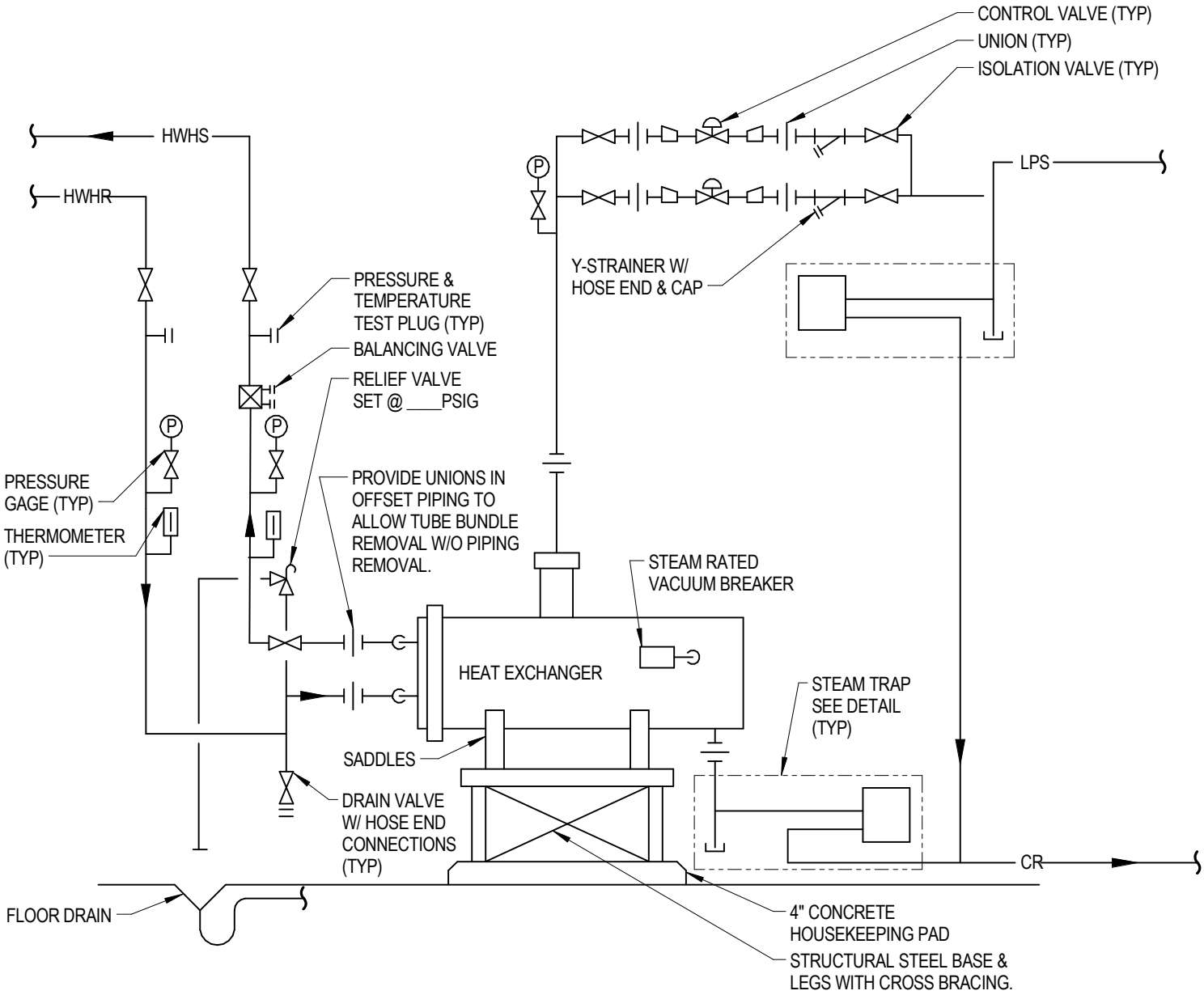

STEAM-TO-HOT WATER HEATING HEAT EXCHANGER PIPING DIAGRAM

NO SCALE

NOTES:

1. USE INVERTED BUCKET STEAM TRAPS WHERE PRESSURE EXCEEDS 100 PSI
2. USE INVERTED BUCKET STEAM TRAPS WHERE CONDENSATE WILL BE LIFTED TO A HIGHER ELEVATION.
3. TRAP SELECTION BASED ON 1/2 PSI DIFFERENTIAL & 15 PSIG INLET.
4. CAPACITIES BASED ON CONTINUOUS DISCHARGE OF CONDENSATE. MULTIPLY EQUIPMENT CONDENSATE LOAD BY 3 WHEN SELECTING TRAPS.

DRIP & TRAP SIZE SCHEDULE		1/2 PSIG DIFFERENTIAL 15 PSIG INLET	
CONDENSATE LOAD LBS./HR.	"A" LEG SIZE	"B" TRAP AND PIPE SIZE	REMARKS
0-100	1"	3/4"	
101-250	1"	1"	
251-600	1 1/2"	1 1/4"	
601-1200	1 1/2"	1 1/2"	
1201-2500	2"	2"	
2501-7900	3"	2"	OVERSIZED ORIFICE
7901-UP	4"	USE EQUAL SIZED MULTIPLES OF THE ABOVE TRAP	

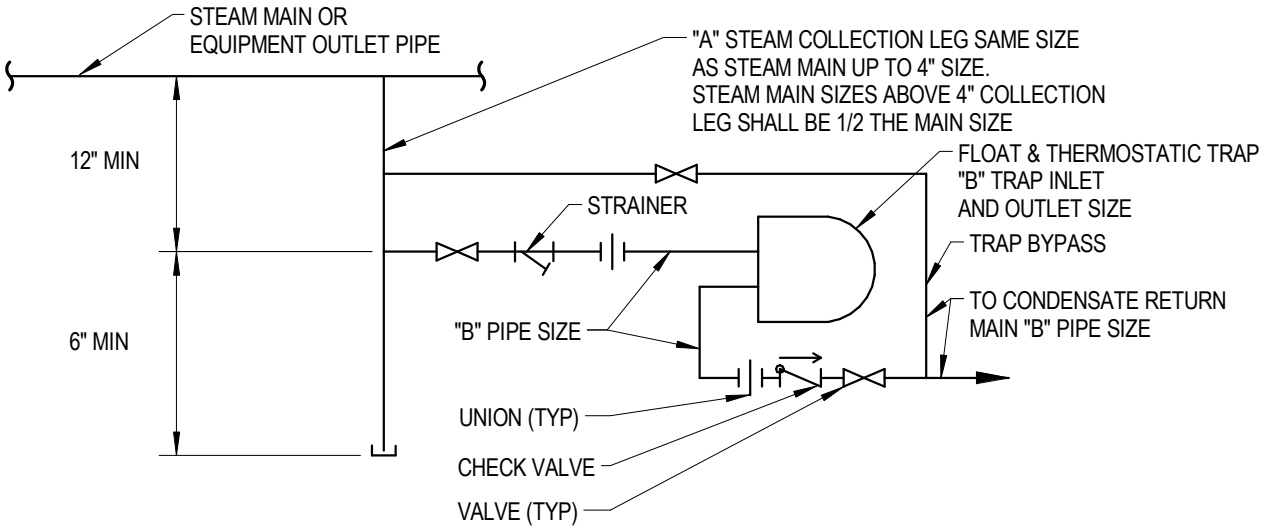

STEAM DRIP & TRAP DETAIL

NO SCALE

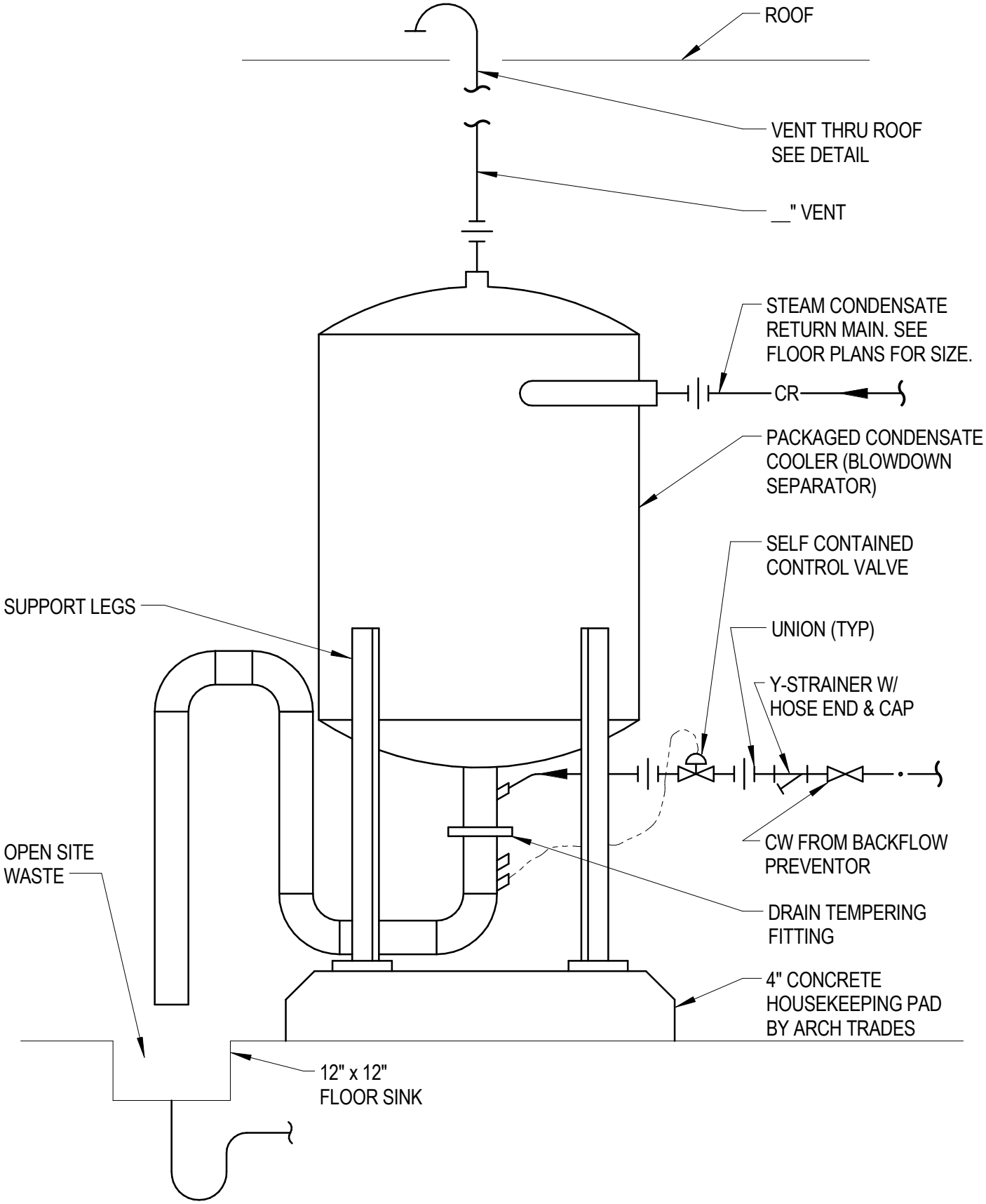

CONDENSATE COOLER PIPING DIAGRAM

NO SCALE

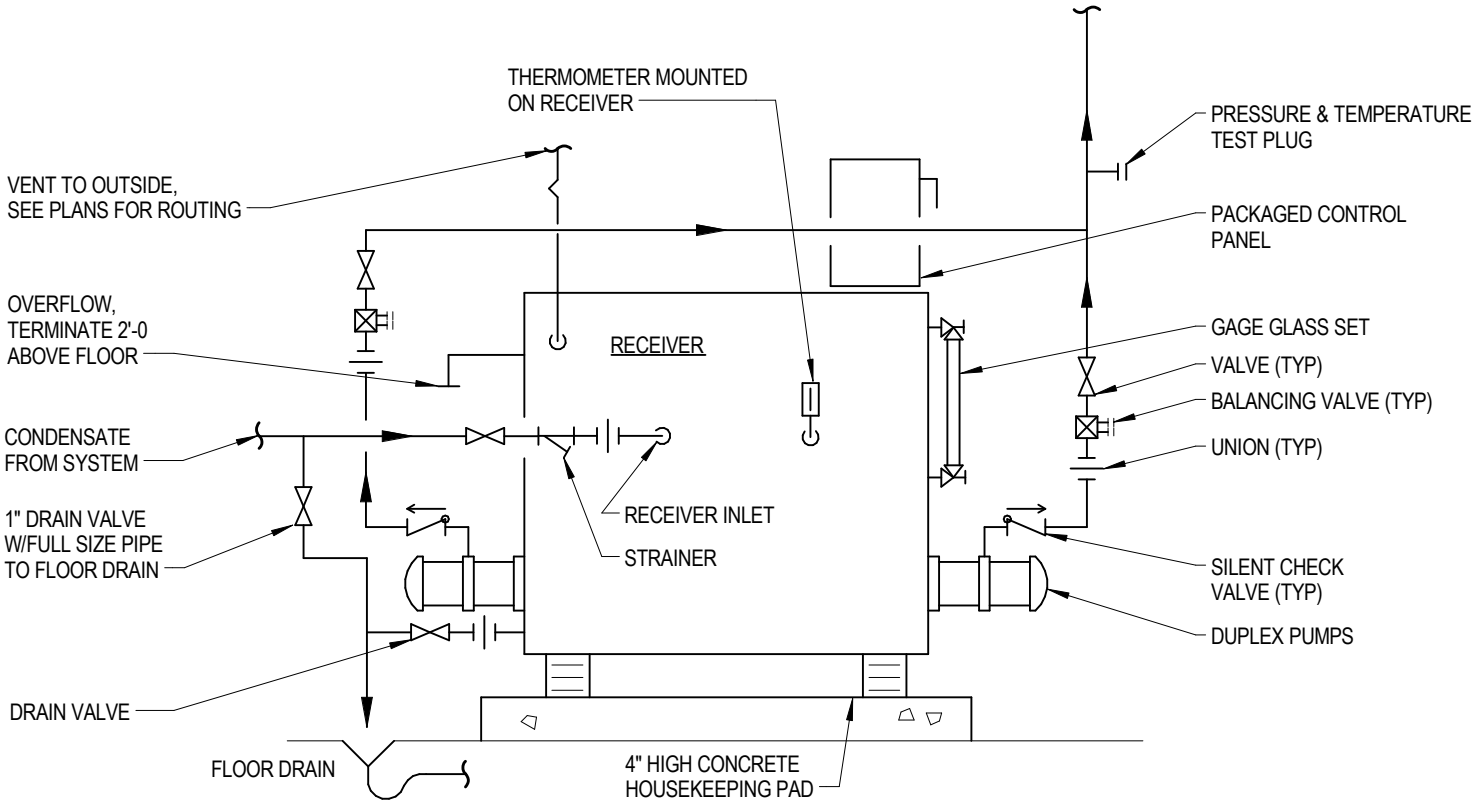

DUPLEX CONDENSATE RETURN UNIT PIPING DIAGRAM

NO SCALE

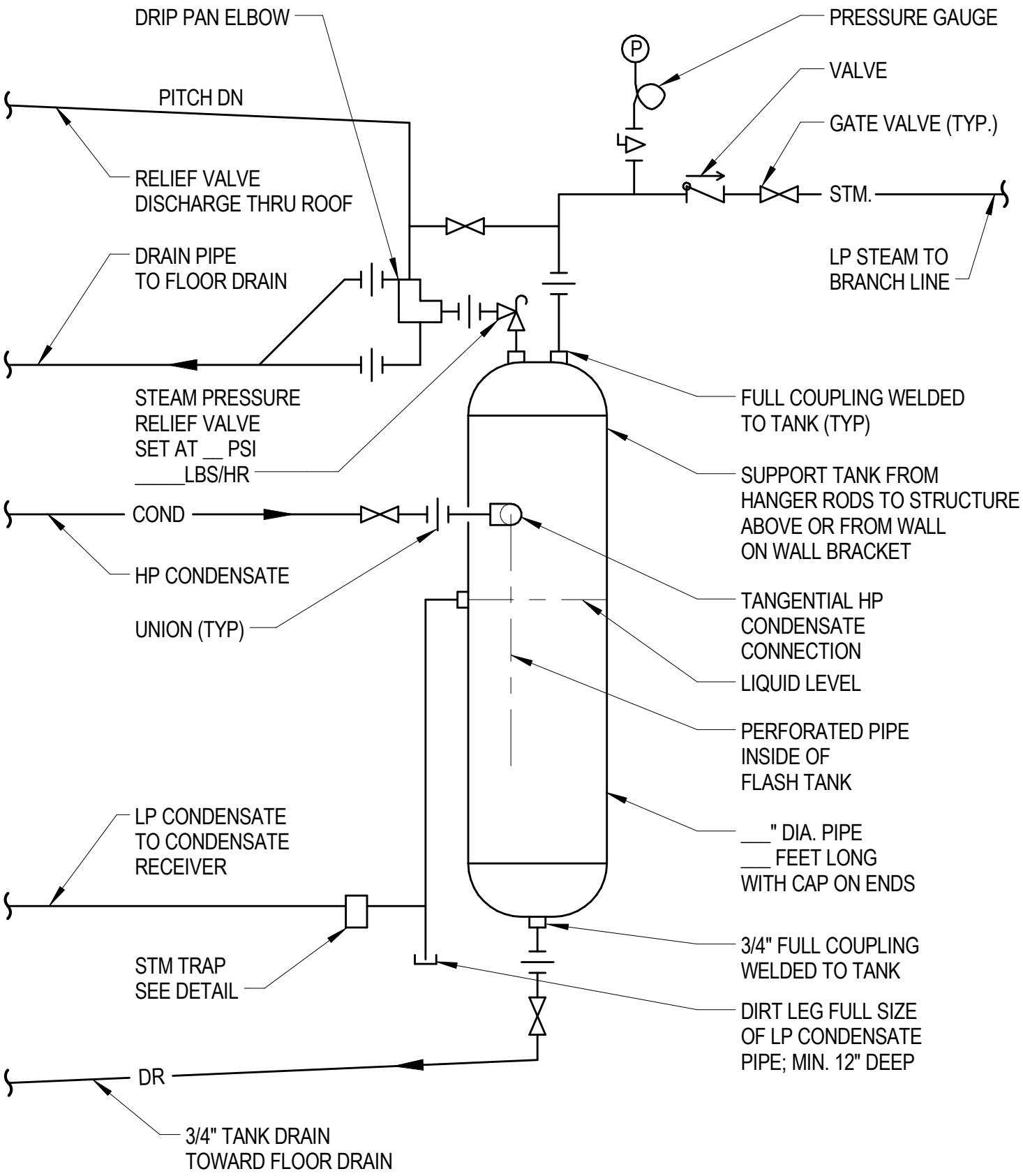

FLASH TANK DETAIL

NO SCALE

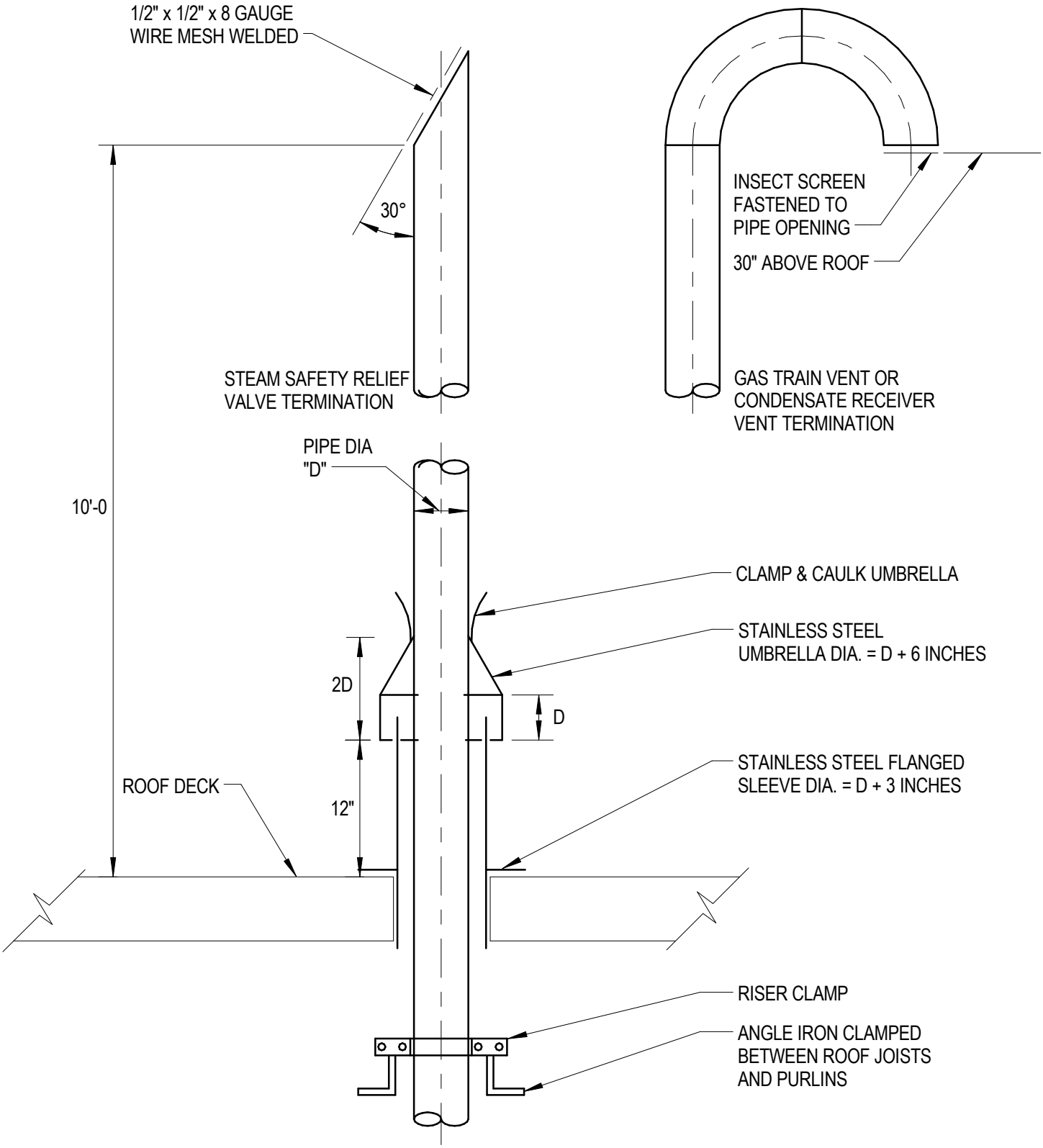

RELIEF VENT DETAIL

NO SCALE

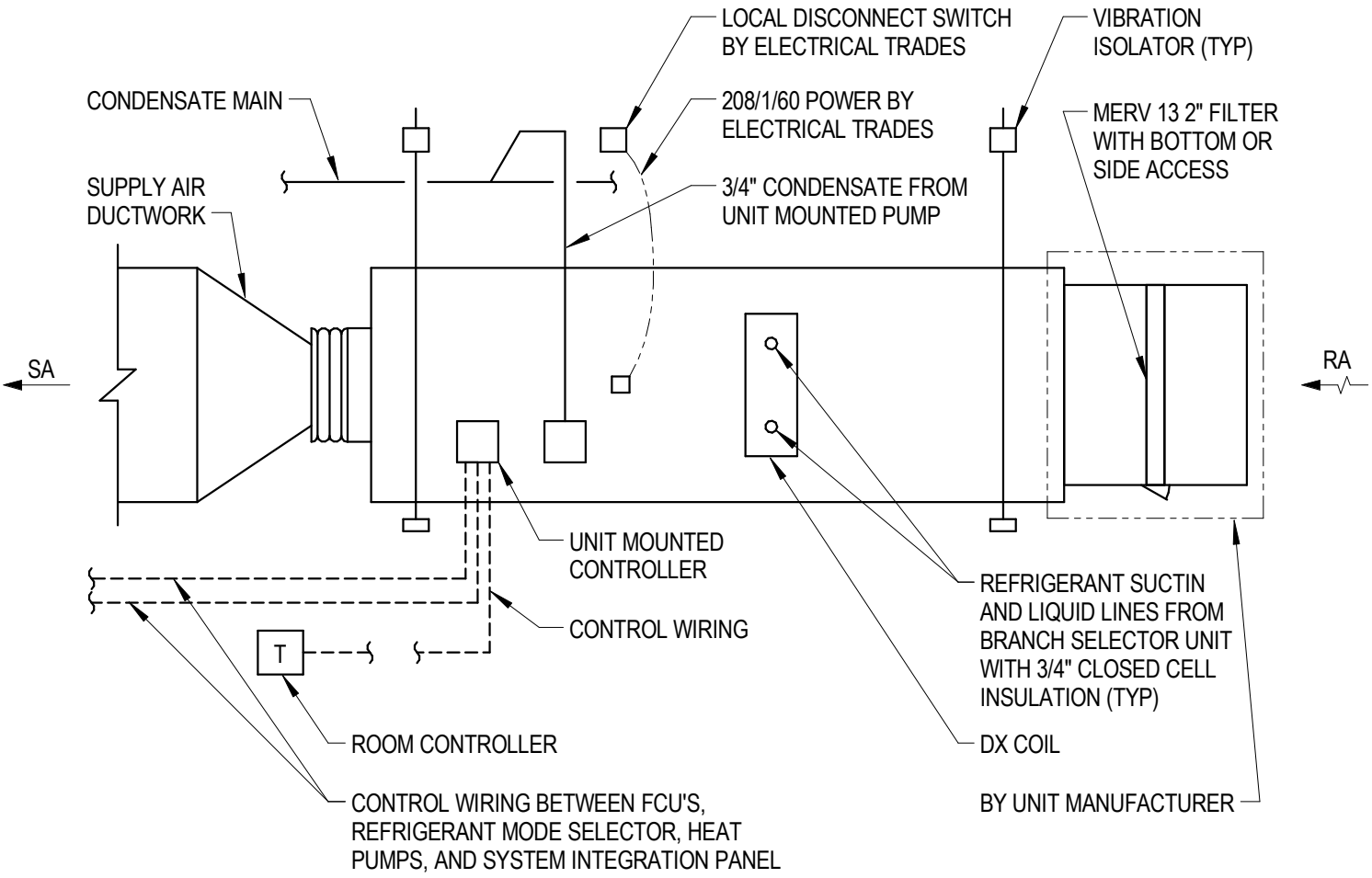

VRF DUCTED EVAPORATOR DETAIL

NO SCALE

NOTE:
DAIKIN VRF SYSTEMS ARE THE BASIS OF DESIGN. WHICH DOES NOT REQUIRE CONDENSATE DRAINS. IF ANOTHER APPROVED MANUFACTURER IS USED. THE CONTRACTOR SHALL INCLUDE THE COST TO INCLUDE CONDENSATE DRAIN PIPING TO ALL RMS BOXES IN THEIR BID PRICE.

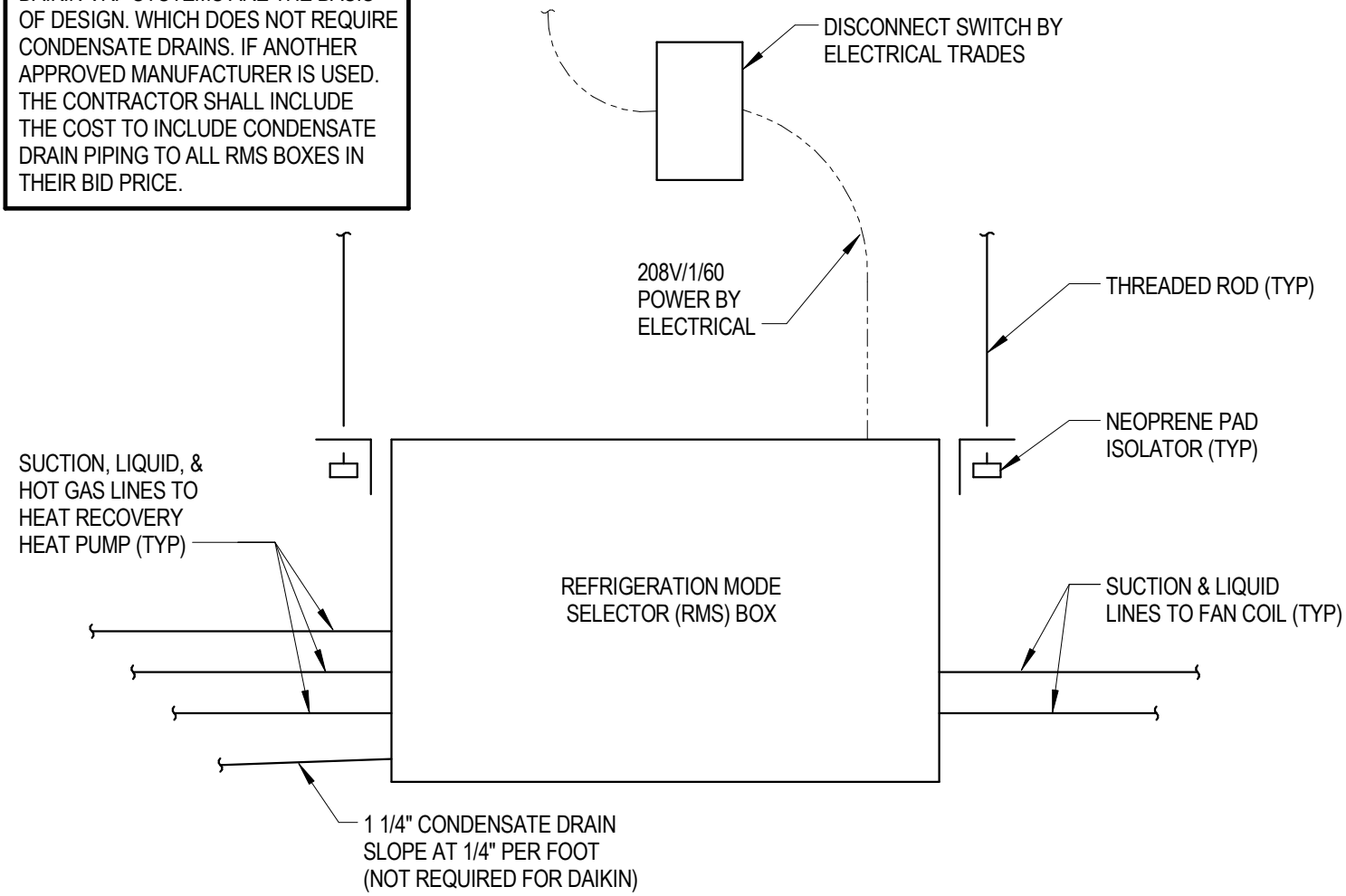

REFRIGERATION MODE SELECTOR BOX DETAIL

NO SCALE

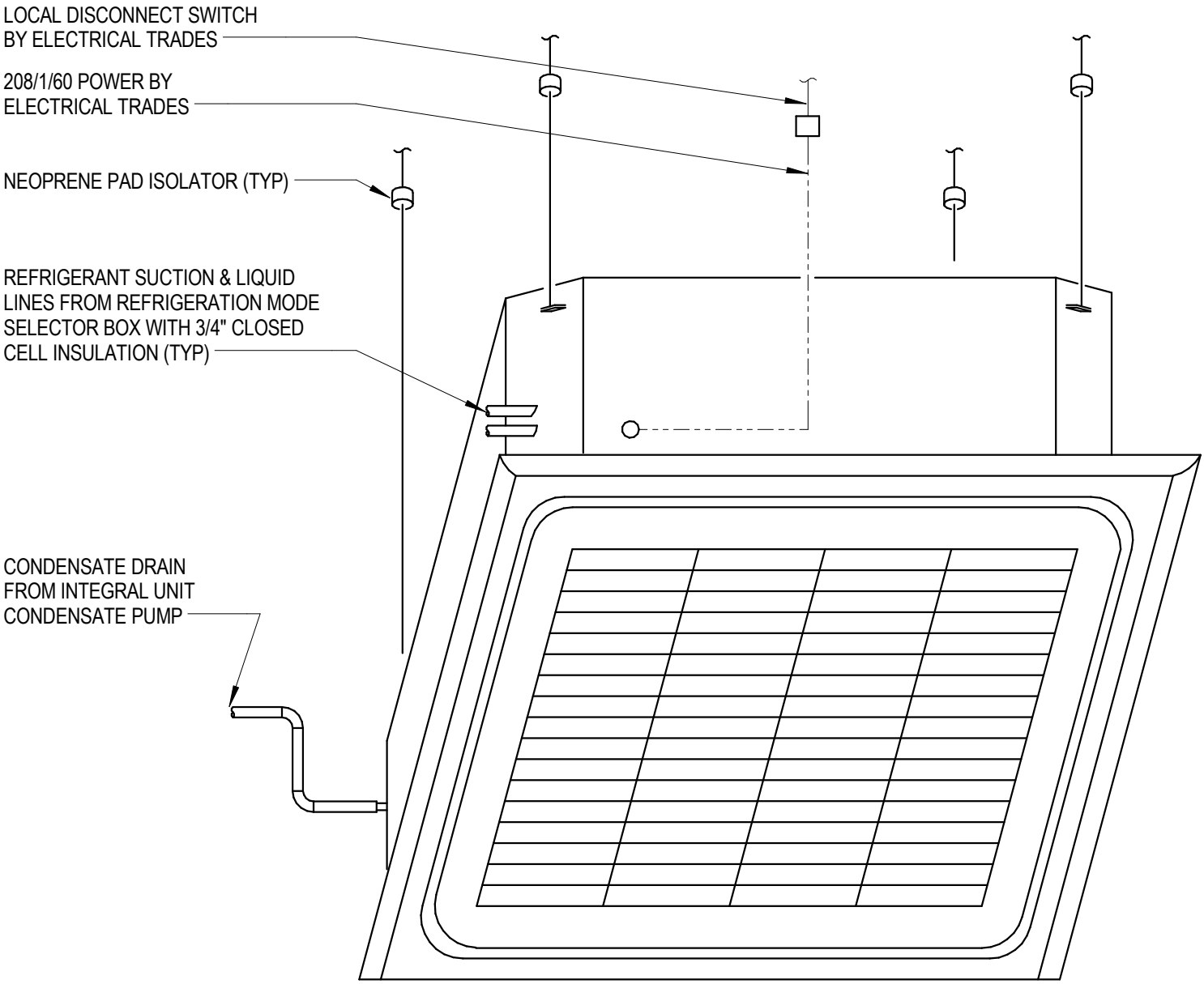

VRF CEILING CASSETTE INDOOR UNIT DETAIL

NO SCALE

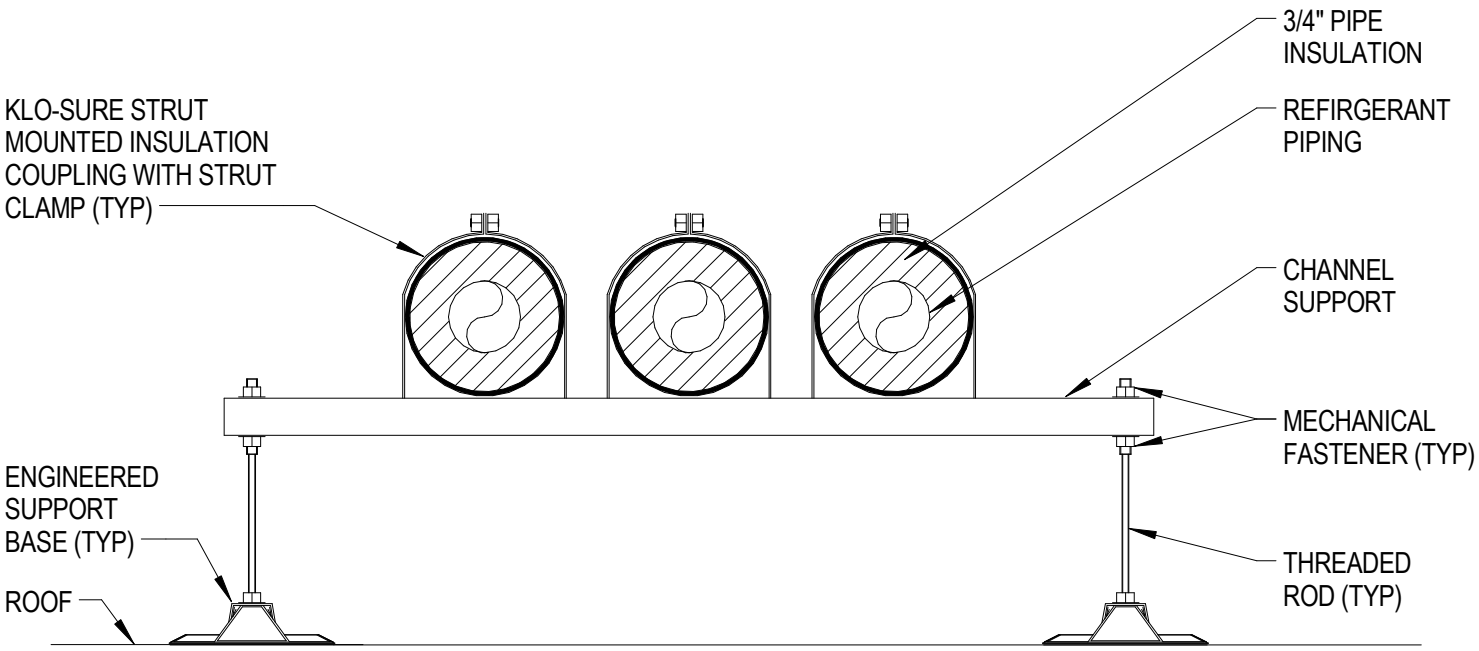

NOTE:
MANUFACTURER SHALL BE MIRO INDUSTRIES, INC. OR APPROVED EQUAL.

ROOF MOUNTED REFRIGERANT PIPE SUPPORT DETAIL

NO SCALE

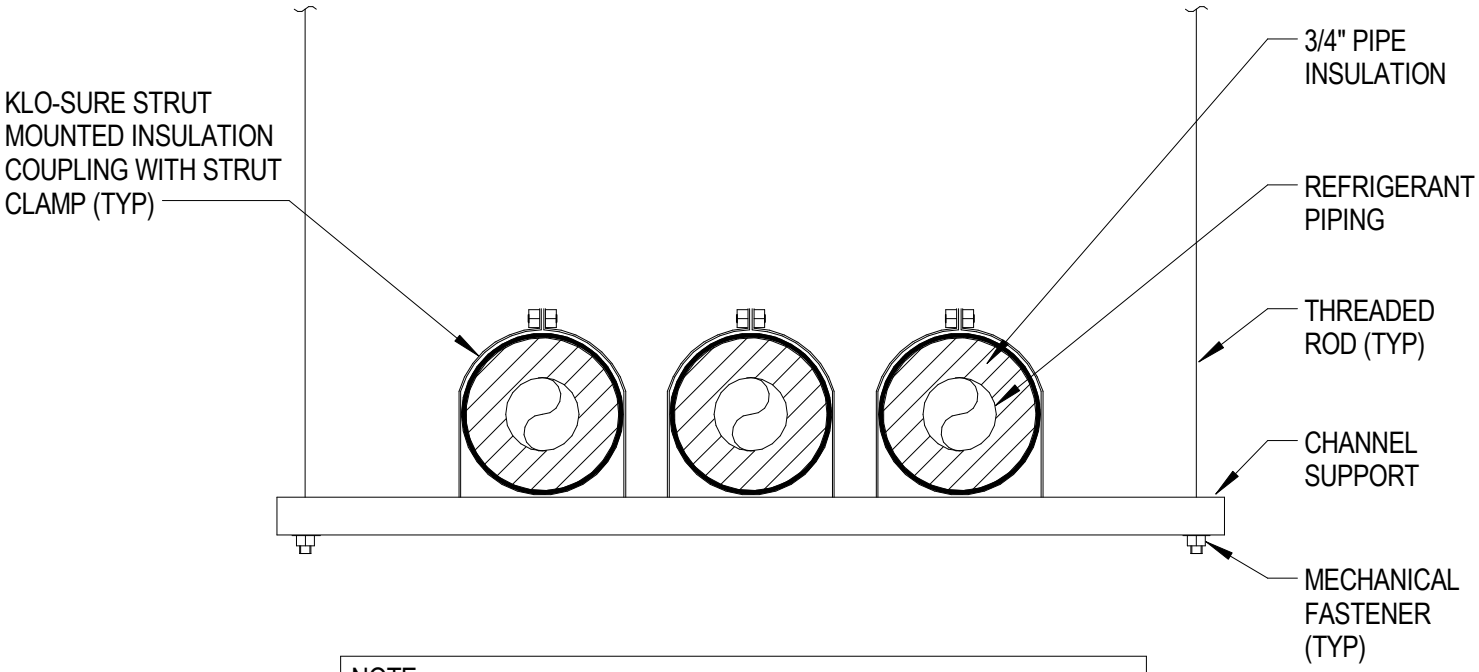

NOTE:
PIPING SHALL BE MOUNTED TO TOP OF CHANNEL SUPPORT ONLY.
DO NOT CLAMP PIPING TO UNDERSIDE OF CHANNEL SUPPORT.

REFRIGERANT PIPE HANGER DETAIL

NO SCALE